TECHNICAL TRANSACTIONS | CZASOPISMO TECHNICZNE
ELECTRICAL ENGINEERING | ELEKTROTECHNIKA

1-E/2016

DOI: 10.4467/2353737XCT.16.040.5302

WALDEMAR ZAJĄC-DOMAŃSKI, JAKUB WŁODARCZYK, MAREK POPCZYK*

DETERMINATION OF HARMONICS IN CURRENT OF THE POWER SUPPLY OF UNDEGROUND RAILWAY TRACTION VEHICLE

WYZNACZANIE HARMONICZNYCH PRĄDU ZASILANIA POJAZDU TRAKCYJNEGO METRA

A b s t r a c t

The article presents the methods of determination and analysis of the continuance of harmonics in the supply current of a modern subway vehicle with an asynchronous converter power. Knowledge of the harmonic content of the supply current is a very important part of the study, allowing the vehicle to operate. In order to determine the harmonic voltages and currents, a computer model of the test vehicle and the power supply and subway substations was created. The simulation was created using the SimPowerSystem library, which is part of the Matlab program. The calculation results were compared with the measurement.

Keywords: current harmonics, traction drives, power supply system, SimPowerSystem

S t r e s z c z e n i e

W artykule przedstawiono metody wyznaczania i analizy przebiegów harmonicznych w prądzie zasilania nowoczesnego pojazdu metra z napędem przekształtnikowym asynchronicznym. Znajomość zawartości harmonicznych w prądzie zasilania jest bardzo ważnym elementem badania dopuszczającym pojazd do eksploatacji. W celu wyznaczenia harmonicznych napięć i prądów powstał model komputerowy badanego pojazdu, sieci zasilającej i podstacji metra. Do symulacji została użyta biblioteka SimPowerSystem będąca częścią programu Matlab. Wyniki obliczeń porównano z pomiarem.

Słowa kluczowe: harmoniczne prądu, napędy trakcyjne, system zasilania, SimPowerSystem

* Ph.D. Eng. Waldemar Zając-Domański, M.Sc. Eng. Jakub Włodarczyk, M.Sc. Eng. Marek Popczyk, Department of Traction and Traffic Control, Faculty of Electrical and Computer Engineering, Cracow University of Technology.

1. Introduction

The article discusses a vehicle power system. The main circuit of a modern traction vehicle of a subway railway was described, and the parameters of replacement diagrams, necessary for simulation, were set. An attempt was made to compare the spectra of harmonics in the supply current in different positions of the vehicle relative to the substation, vehicle speed and propulsion torque. These results were compared to the normative limit values for current supply harmonics. It is very important for the electric and electronic environment of the subway railway. The power system is very different, compared to the conventional rail system: subway railway traction substations do not have filters, there is the so-called third rail, there are short distances between stops and there is heavy traffic.

2. Discussion of the main circuit of a modern subway car

In modern traction vehicles, the main elements of any vehicle powered by a direct current network are traction converters (current inverters), asynchronous squirrel cage motors, braking resistors and the input filter. The current received from the pantograph of the vehicle is transmitted to the main switch protected against both overvoltage (spark gap) and overload (fuse and overcurrent relay). The next element in the vehicle is the LC filter composed of the inductive element L and the capacitance element C. It plays an important role: it blocks signals within a certain frequency range or allows them to pass, and compacts defined harmonics. It is an input circuit of the inverter acting as a traction converter. In order to transform the current received by the pantograph of the traction line, traction inverters are used. In most applications in modern subway vehicles, inverters are used to power the traction motors. Motors and their rotational speed are formed by an inverter using a scalar adjustment of the output voltage frequency, by changing the shape of the amplitude and frequency of the basic three-phase harmonic voltage wave produced by the inverter. In order to precisely control the torque of the motor in the inverter drive, vector-based control is used, based on the spatial vectors representing voltage, magnetic fluxes, motor currents. These vectors are rotating vectors in the variable complex plane. Modern traction inverters are built in the IGBT technology (Insulated Gate Bipolar Transistor), insulated gate transistors are characterised by high power, high breakdown voltage and high speed switching. Control of IGBT consists in changing the potential of the insulated gate. The traction inverter, depending on the type of vehicle and power system, can feed each traction motor independently or as a group of four motors, for example. The first solution allows for the optimal use of traction properties. It has an independent string of power supply for each traction motor (independent power and control). The calculations were performed for the data in Table 1.

Table 1

Number of engines	16
Type of traction motors	1TB2006-0GA02 power 160 [kW]
Continuous power	2240 [kW]
Supply voltage	750 [V] DC/ third rail
Type of converter drive Supply voltage	SITRAC G 750 D 570/800M IGBT from 300 [VDC] to 950 [VDC]
Main inverters	The output frequency from 0 to 200 [Hz] Rated input current of 600 [A] Output voltage three-phase 3×570 [V] AC

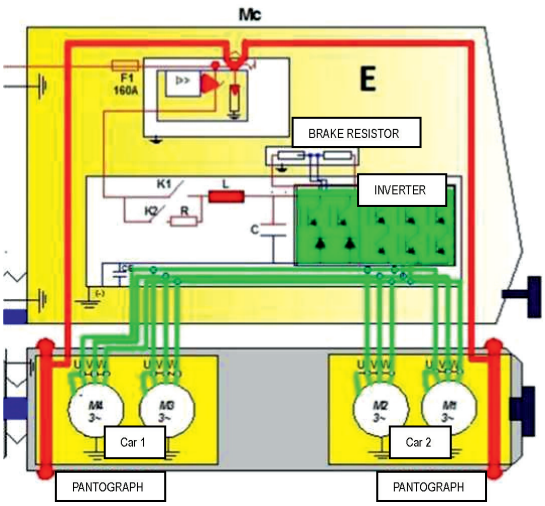

Fig. 1. Diagram of the main circuit of a modern subway car

3. Designated parameters of the replacement system

Each element of the diagram of the replacement system requires the calculation of its parameters for a precise image.

3.1. The determined parameters of replacement system

Replacement reactance of X_{GPZ} source determined by the formula (1):

$$X_{GPZ} = \frac{1.1 * U^2}{S_Z} [\Omega] \tag{1}$$

where:

X_{GPZ} – reactance of the main point of the power supply,
U – rated voltage in [V],
S_Z – short-circuit power GPZ at the rails of the power supply [VA],
for the following data
we obtain:
X_{GPZ} – 2.0625 [Ω]
U – 15 [kV]
S_Z – 120 [MVA]
L_{50} – 6.568 [mH]

3.2. Resistance and inductance of power cables

For cable line of NHKXS type 3× (1×240 mm^2) with a length of 1.000 [m], we obtain:
R_P – 0.0786 [Ω]
L_P – 0.265 [mH]

3.3. Replacement parameters for a triple-coil transformer

Replacement parameters for the transformer were calculated for the data from Table 2.

Table 2

	COILS		
	I	II	III
Rated voltage in [kV] Un	15.75	0.665	0.665
Losses in copper APcu in [kW]	19	19	19
Short circuit voltage for each pair of coils:	AUZI-II =12 [%] AUZI-III =12 [%] AUZII-III= 12 [%]		
Idling current in [%] Io	0.36		
Losses in iron APfe in[kW]	3.6		
Rated power for all coils [kVA] Sn	2400		

The following results were obtained from the calculations:

- Resistance of coils GNY: 0.155 [Ω],
- Inductance of coils GNY: 0.02 [H],
- Resistance of lateral branch: 813.165 [Ω],
- Inductance of lateral branch: 32.695 [H],
- Resistance of coil DNA: 3.685×10^{-4} [Ω],

- Inductance of coils DNA: 1.173×10^{-5} [H],
- Resistance of coil DNY: 1.106×10^{-3} [Ω],
- Inductance of coils DNY: 1.173×10^{-4} [H].

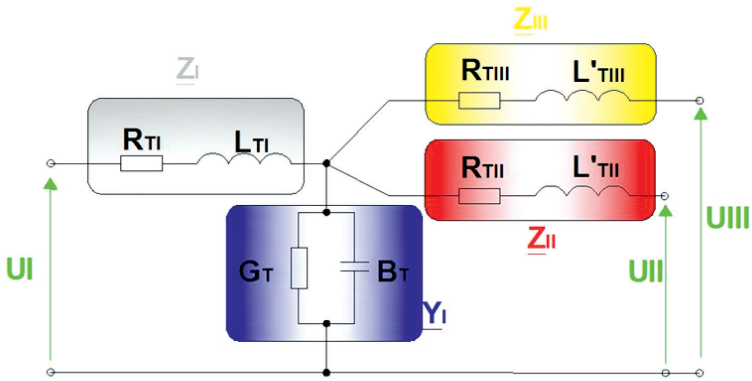

Fig. 2. Replacement diagram of a triple-coil transformer

3.4. Set of diodes

A set of diodes consists of two 6 pulse rectifier bridges, connected in parallel; by using two transformers with different internal connections, phase angles of voltages supplying the bridges are shifted from each other by an angle n/6, so that we incidentally obtain a 12 pulse rectifier. The diagram of the set of diodes is shown in Figure 3.

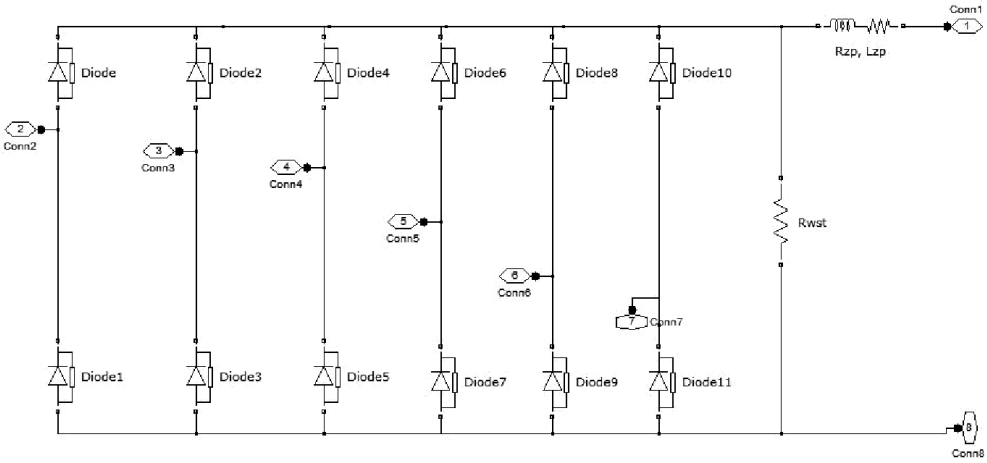

Fig. 3. Diagram of 12-pulse set of diodes

3.5. Traction Network Model

It was assumed that the network between the substation and the vehicle will be represented by one four-pole with the parameters based on the assumed distance between objects. Based on the data and calculations, the following parameters of the subway traction network model were obtained (Table 3).

Table 3

Parameters of the traction network model

Assumptions	Unit parameters of the network
Third rail traction line type with section 6601 mm^2 Double track line with tracks isolated from each other Rail paths type S49 Power supply cable with section 2×625 mm^2	Resistance R*sm* = 31.4 mΩ/km Inductance L*sm* = 0.695 mH/km Capacity C*sm* = 2.6 nF/km

4. Simulation of power and control system in SimPowerSystem

Calculated or assumed parameters were used to build a complete replacement system of the vehicle together with its power system. This system was created in SimPowerSystem, which is Simulink library version 7.3. SimPowerSystem provides ready-made electrical components and power electronics (sources, converters, motors, etc.). This simplifies the creation of the system, as there is no need to create a mathematical model of the motor or inverter etc., and the very structure of the system consists of an appropriate combination of blocks and application parameters the item requested by the program. However, a direct connection between the elements is possible only within the library.

SimPowerSystem also has in its library blocks responsible for the display of the measured signals, such as the Scope block, which corresponds to the virtual oscilloscope and allows a real-time preview and recording of the measured signal. A great advantage of SimPowerSystem libraries are embedded signal analysis tools, including FFT analysis, and a tool for determining the impedance of a component as a function of frequency. These tools were used to calculate the characteristic of the impedance of the input filter of the vehicle as a function of frequency, as well as to determine the harmonics in the input current of the vehicle in this article. During simulation, the SimPowerSystem library may use one of three methods of the system solutions: continuous, discrete, phase, and also of the algorithm of ideal commutation, which improves the efficiency and reduces the simulation time for the systems with elements of a high switching frequency. The continuous method has a high accuracy by changing the size of the sampling step, and it is used to capture the dynamics of the system. The discreet method allows to control the accuracy of the simulation by selecting the time step. In the simulation of the vehicle and the network, the method used was the discreet method with integration step equal to Ts = 10 [ps].

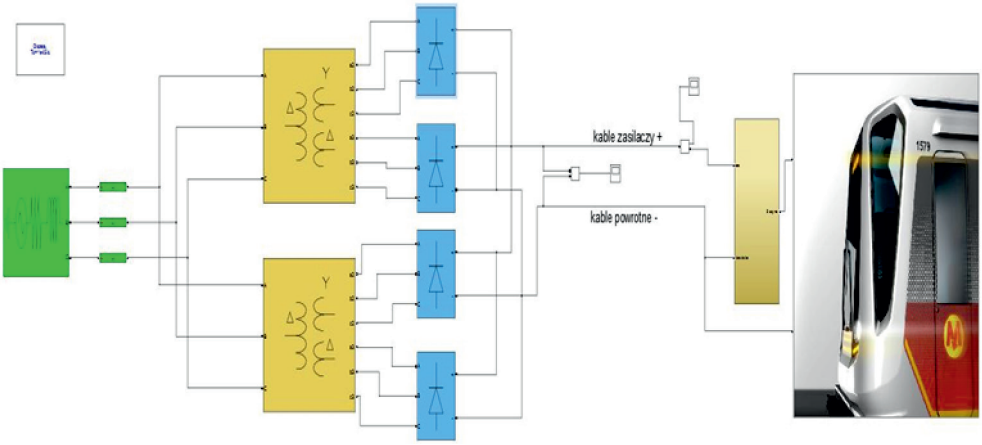

Fig. 4. The full diagram of the circuit system built in Simulink: green indicates the power system along with the power line, light brown indicates rectifier transformers, and blue indicates rectifiers

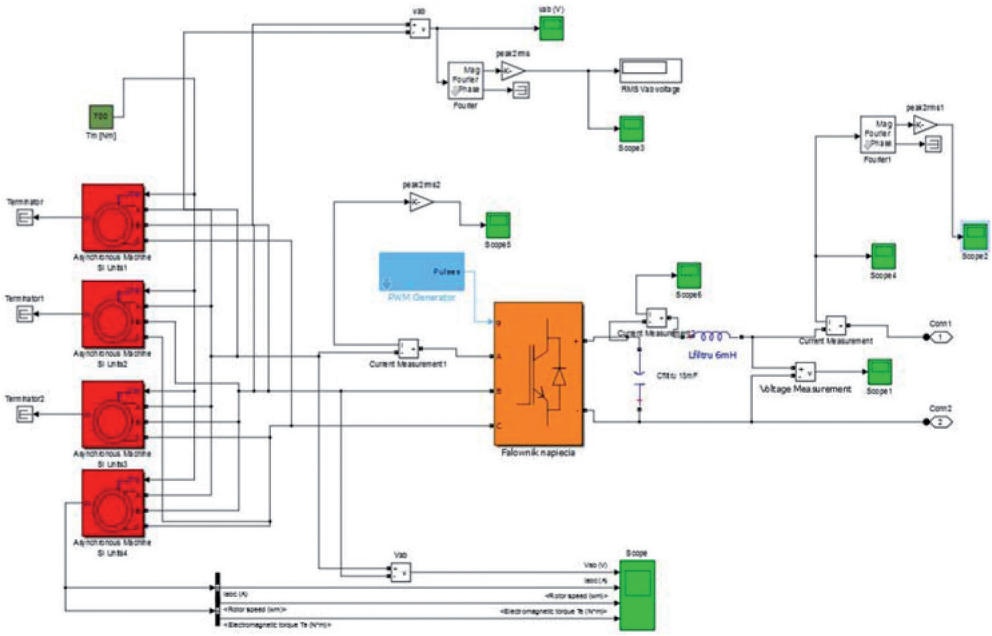

Fig. 5. Diagram of the control system of traction motor of the vehicle, built in Simulink, orange indicates an inverter, blue indicates a pulse generator, and red indicates blocks of traction motors, green indicates the measurement of various parameters with ‘Scope’ blocks

5. Charts obtained from the simulation

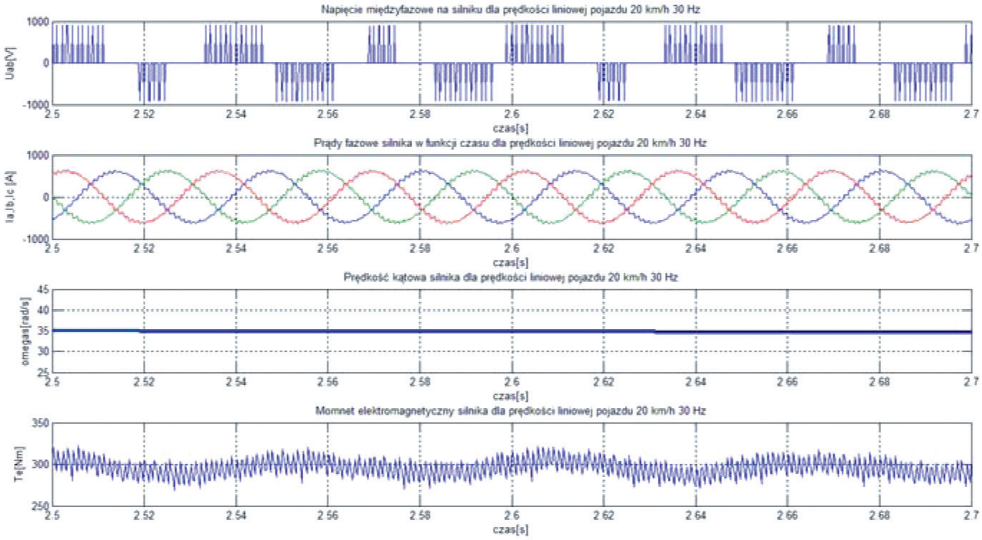

Fig. 6. Starting from top to bottom, the continuance as a function of time, the Uab voltage of ASM motor, the phase currents Ia, Ib, Ic of ASM motor, the angular velocity omega of ASM motor, Te torque of ASM motor for a vehicle speed of 20 km/h

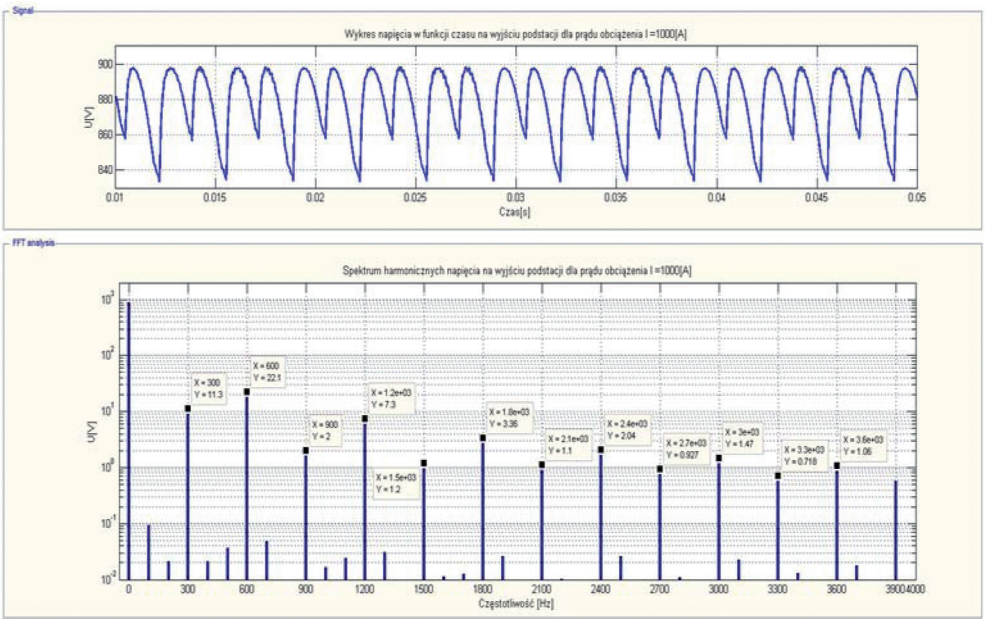

Fig. 7. From the top: charts of voltage on a substation with a resistant type of current load Iobc = 1000 [A] and harmonics occurring at this voltage

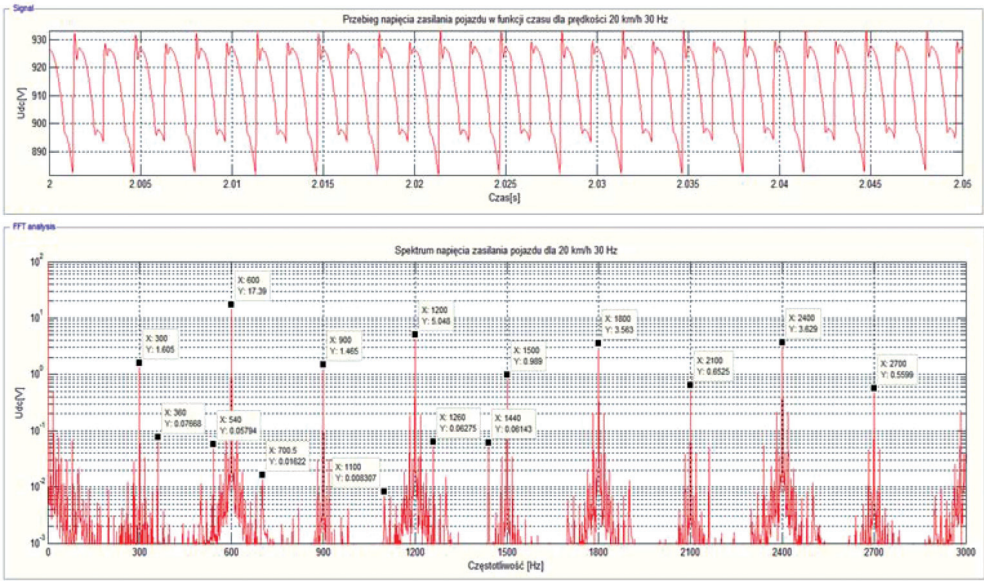

Fig. 8. From the top: charts of voltage of the power supply of the vehicle versus time and harmonics spectrum for a speed of 20 km/h

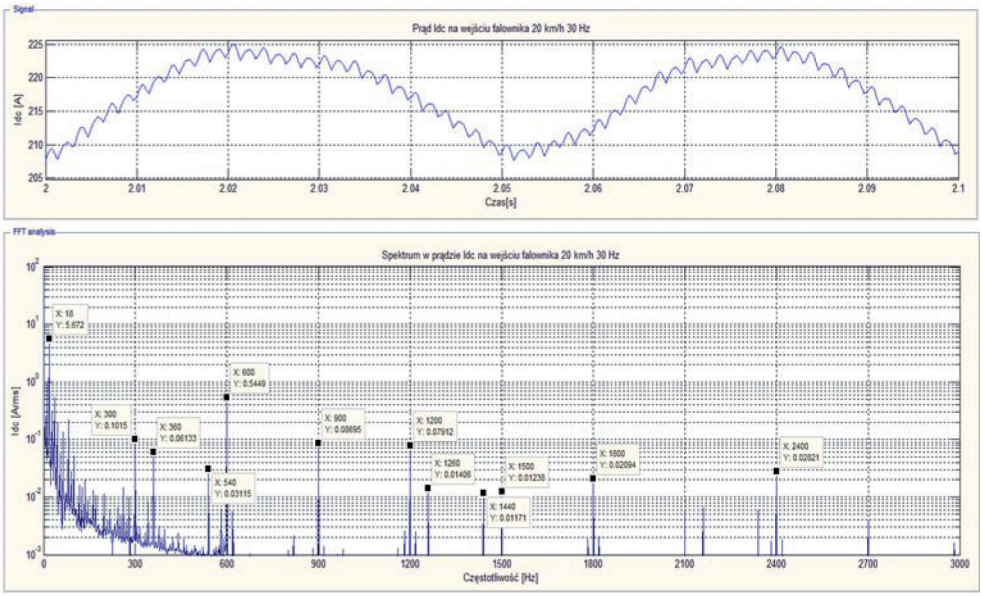

Fig. 9. From the top: charts of the input current Idc of the inverter versus time of the power supply of the vehicle and harmonics spectrum for a speed of 20 km/h

6. Charts obtained from actual measurements of the drive of the subway vehicle

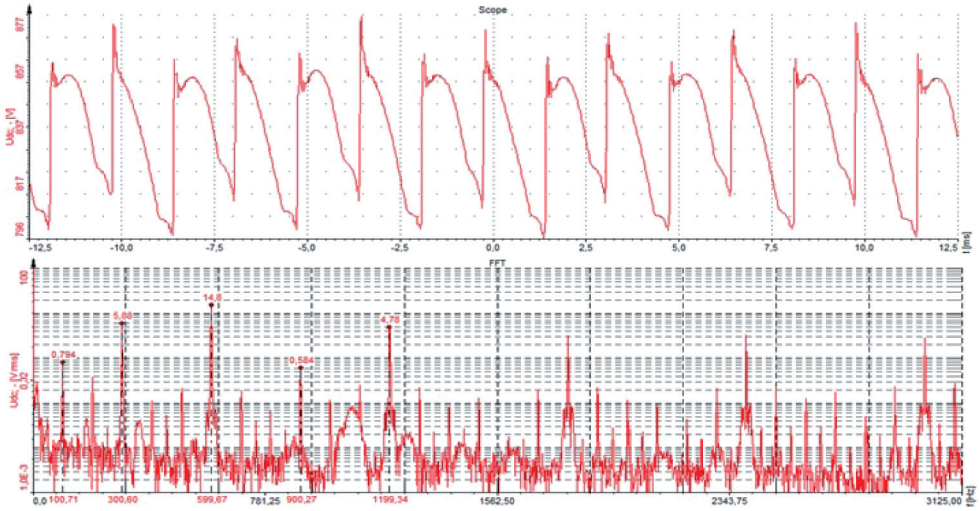

Fig. 10. From the top: charts of voltage of the power supply of the vehicle versus time and harmonics spectrum for a speed of 20 km/h

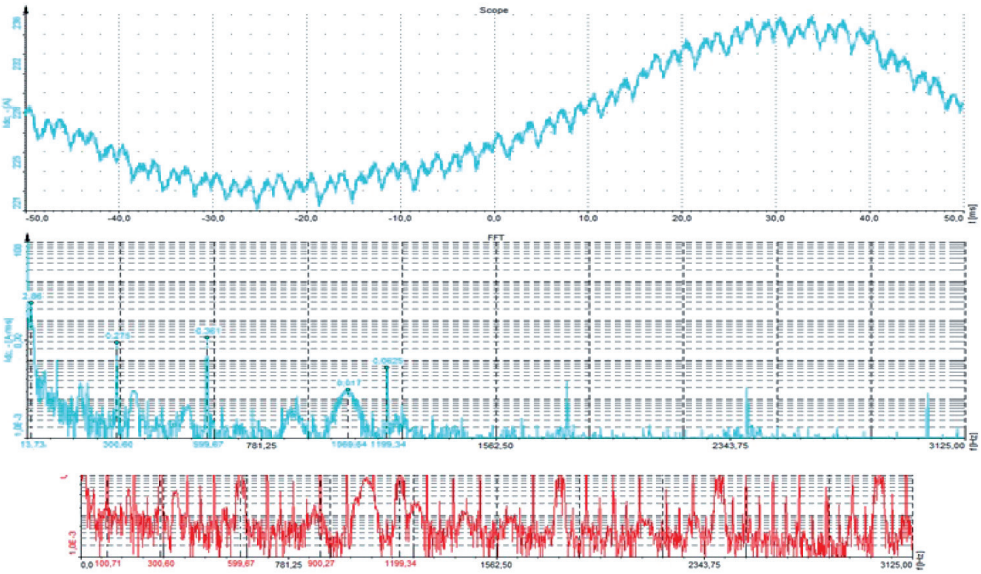

Fig. 11. From the top: chart of the input current Idc of the inverter versus time of the power supply of the vehicle and harmonics spectrum for a speed of 20 km/h

7. Conclusions

The article presents the method of calculation of the harmonics in the power supply system of the subway railway vehicle. The model of the vehicle, the power system and traction substation was built in Simulink and can be used to determine the current harmonics in order to evaluate and allow the vehicles to operate. Due to the exact calculation of the exemplary parameters of the system, the model accurately reflects the phenomena occurring during the cooperation of the vehicle with a substation and makes the absolute error A low – about 2% .The results of the calculations show the dominant role of harmonics coming from substations because substations operate without filters. There are also present harmonics resulting from the operation of the inverter and there may occur harmonics, which are a result of the phenomenon of the "avalanche of harmonics".

References

[1] Baranecki A., Dziuba R., Kundera A., Niewiadomski M., *Nowoczesne asynchroniczne napędy trakcyjne*, SEMTRAK 2004.

[2] Sikora A., Kulesz B. *Wielofazowe transformatory prostownikowe podstacji trakcyjnych*, Czasopismo Techniczne 1-E/2007.

[3] Szeląg A., Maciołek T., *Elektroenergetyka trakcyjna linii kolejowych w Polsce – uwagi dotyczące procesu projektowania*, TTS,7.08.2012.

[4] Mrozek B., Mrozek Z., *Matlab i Simulink. Poradnik użytkownika*, wydanie 2, Helion 2004.

[5] Dokumentacja Techniczo-Rozruchowa Transformatora TZM3T 2400/15 – ABB 2013.

[6] Dokumentacja Techniczo-Rozruchowa Prostownika diodowego PD 24/0,8dd – ABB 2013.

[7] Kałuża E., Zając W., *Trakcja elektryczna*. *Vademecum Elektryka*, rozdział 18, SEP, Kraków 2004.

[8] Malisz K., Prusak J., Zając W., *Wyznaczanie eksperymentalne parametr*ów *R, L, C kolejowej sieci trakcyjnej*, Instytut Elektrotechniki i Elektroniki Politechniki Krakowskiej, Transystem 1989.

[9] Hanasz M., Ostaszewicz J., Wdowiak J., *Sieci i podstacje trakcji elektrycznej*, WKiŁ, Warszawa 1965.

[10] Klempka R., Sikora-Iliew R., Stankiewicz A., Świątek B., *Modelowanie i Symulacja układów elektrycznych w Matlabie*, Uczelniane Wydawnictwo Naukowo-Dydaktyczne AGH, Kraków 2007.

[11] Piróg S., *Energoelektronika*. *Układy o komutacji sieciowej i o komutacji twardej*, Uczelniane Wydawnictwo Naukowo-Dydaktyczne AGH, Kraków 2006.

[12] Zając W., Czuchra W., Popczyk M., *Badanie harmonicznych prądu trakcyjnego tramwaju napędem asynchronicznym*, SEMTRAK 2002.

[13] Kremens Z., Sobierajski M., *Analiza systemów elektroenergetycznych*, WNT, Warszawa 1999.