TECHNICAL TRANSACTIONS | CZASOPISMO TECHNICZNE
CHEMISTRY | CHEMIA
1-Ch/2013

PIOTR MIGAS, MARTA KOROLCZUK-HEJNAK, MIROSŁAW KARBOWNICZEK, ANDRZEJ ŁĘDZKI*

RHEOLOGICAL ANALYSIS OF BLAST FURNACE SYNTHETIC SLAG ADMINIXTURES OF Al_2O_3

ANALIZA REOLOGICZNA SYNTETYCZNYCH ŻUŻLI WIELKOPIECOWYCH DOMIESZKOWANYCH AL_2O_3

A b s t r a c t

It is common for researchers to believe that liquid slag is a fluid characterized by rheological behavior of ideally viscous Newtonian body. At the same time it is assumed that the fluid is similar to synthetic polymers in terms of its structure. The authors of this paper conducted research into 4-component liquid and solid-liquid synthetic slag system: $CaO–SiO_2–MgO–Al_2O_3$ The research involved graphite measurement systems. A perforated spindle was used for the solid-liquid systems subject to shear stress, whereas a smooth one was used for fully liquid systems. Both measurement systems worked according to Searle's system. This paper presents selected rheological research results concerning oxide solutions in high temperatures and their rheological analysis.

Keywords: *liquid slags*, *rheology*, *non-Newtonian flow*

S t r e s z c z e n i e

Wśród badaczy panuje powszechny pogląd, że ciekły żużel jest cieczą wykazującą zachowania reologiczne ciała doskonale lepkiego Newtona. Zarazem przyjmuje się, że jest on cieczą o podobieństwie strukturalnym do polimerów syntetycznych. Autorzy artykułu wykonali badania czteroskładnikowych ciekłych oraz stało-ciekłych żużli syntetycznych systemu: $CaO–SiO_2–MgO–Al_2O_3$. Do badań wykorzystano grafitowe systemy pomiarowe. Systemy stało-ciekłe poddawano działaniu naprężeń ścinających z wykorzystaniem wrzecion perforowanych dla systemów całkowicie ciekłych użyto wrzecion gładkich. Obydwa układy pomiarowe pracowały w systemie Searle'a. W artykule zaprezentowano wybrane wyniki badań reologicznych roztworów tlenkowych w wysokich temperaturach oraz ich analizę reologiczną.

Słowa kluczowe: *ciekły żużel*, *reologia*, *przepływ nienewtonowski*

* PhD. Eng. Piotr Migas, MSc. Eng. Marta Korolczuk-Hejnak, PhD. Eng. Mirosław Karbowniczek, Prof. PhD. Eng. Andrzej Łędzki, AGH University of Science and Technology, Faculty of Metals Engineering and Industrial Computer Science, Department of Iron Alloys Metallurgy.

1. Introduction

Viscosity is one of the basic physical properties when it comes to metallurgical processes involving liquid slag and metal phases. It has direct influence on the kinetics of reactions taking place between liquid metal and slag as well as on the flow of these phases in metallurgical aggregates. That is why this property is a key parameter mentioned not only in the existing mathematical models but also the ones that are being developed.

The rheological character of liquid slag should be defined not only on the basis of its chemical composition and temperature but also by means of rheological parameters such as: t – time in which the force was applied to the system, τ – shear stress, γ – shear rate [1].

The rheological parameters present in the actual metallurgical processes, which are very difficult to measure, include: dynamics of the arc's influence on the properties of liquid steel and slag, dynamics of the influence of a reduction gas on liquid slag and pig iron in the blast furnace, the phenomena involving the move of semi-liquid and liquid products down the blast furnace in counter-flow with the reduction gas and then their flow down between the pieces of coke.

All these factors influence the liquid slag and pig iron by means of a certain dynamic force. They result in the occurrence of shear stress in the layers of moving slag – changing at the same time its dynamic viscosity coefficient and in some cases its rheological character. It is commonly assumed that fully liquid slag (being a Newtonian fluid) does not change its viscosity under the influence of an applied force. Its viscosity was also influenced by the solid elements content in the liquid – elements which precipitated while the temperature was being decreased, in the course of chemical reactions, as a result of modifying the chemical composition and finally because of solid elements entering slag from the outside, e.g. coal dust, carbides, nitrides insoluble in slag.

Solid-liquid slag systems are present in many metallurgical processes such as: blast furnace process – PCI, the cohesion zone and slag dripping; the arc furnace process – slag foaming, slag in the production of chrome steel; COS – steel casting, casting powder, pig iron and steel refining – 3D technology, desulphurization, dephosphorization, desilicanization. All these processes involve solid elements which precipitated from the solution or which were introduced to the slag system.

The literature contains a significant amount of measurement data concerning the dynamic viscosity of metallurgical slag for fully liquid slag systems [2–5, 15–16]. Their authors did research into the influence of the chemical composition, basicity and temperature on viscosity. Few research centers [6, 7] undertook the complicated research into the changes of the dynamic viscosity coefficient as a rheological property of the liquid or solid-liquid multi-component slag systems.

Rheology is a study of the material deformation and its transition to plastic state. Rheology focuses on such issues as: changing relations between stress and deformation in the function of time, changing viscosity, separation and mixing of substance particles affected by stress [14]. Rheology is a study of two different types of fluids [8]:

- Newtonian fluids – (ideal viscosity) which show a linear relationship between the shear stress and the shear rate,

– Non-Newtonian fluids – which show non-linear relationship between the shear stress and changes in the shear rate.

Newtonian fluids are characterized by a stable viscosity in the course of the flow, the independence of the deformation rate and the repeatability of viscosity value in the course of subsequent identical flows. The viscosity of non-Newtonian fluids is referred to as apparent viscosity. It is independent of the deformation rate, duration and pressure. In reality most fluids are non-Newtonian ones.

The rheological description of fluids includes viscous and elastic features. The viscous features can be determined by defining the flow curve, i.e. the relation between the shear stress (triggered by the shearing fluid) and the shear rate (velocity gradient existing in the flowing liquid). In order to determine the elastic features it is necessary to measure the normal stress in the course of a given viscous flow. Such analysis allows to determine the relationship between the deformation, the shear rate and the shear stress.

Recently researchers have been developing and describing many models used to determine the viscosity of aluminosilicate slag: Urbain's, KTH, Iida, QCV [8–13].

The viscosity (η) of slag is to a large extent dependent on the temperature and the structure of the fluid [14]. It is a measure of the ability of slag to flow when the shear stress is applied. Most slag and metallic fluids show the characteristics of Newtonian fluids, in case of which viscosity is independent of the shear rate [14]. As a result viscosity is defined by the Newton's equation (1) as a constant of the proportional relationship between the shear stress (τ_{xy}) and the normal velocity gradient to the shear stress $\left(\frac{dv_x}{dy}\right)$.

$$\left(\tau_{xy} = \eta \frac{dv_x}{dy}\right) \tag{1}$$

When the layers in the fluid shear, the bonds break. This is a process activated thermally and it is expressed by the Arrhenius equation (2). It is characterized by coefficient A_A and activation energy E_A:

$$\left(\eta = A_A \cdot e^{\frac{E_A}{RT}}\right) \tag{2}$$

Liquid slag consists of, among others, discontinuous ionic structures whose activation energy is closely connected to the type of ions and ionic complexes present in the system as well as to the interionic forces. Due to the fact that the type and size of ions changes with temperature, the activation energy changes significantly with temperature, too.

The Einstein-Roscoe equation (3) is commonly used to describe the viscosity of slag containing dispersed solid phase. The equation below can be used to estimate the viscosity of partially crystallized slag containing up to 30% solid fraction in the volume of the system

$$\eta_S = \eta_L (1 - R\theta_S)^{-n} \tag{3}$$

where η_S refers to the apparent viscosity of the suspension in the fluid and solid elements and η_S to the viscosity of the fully liquid phase, Φ_S is a volume fraction of the solid phase.

For identical size of spherical particles R and n in the equation amount to 1.35 and 2.5 respectively. The reciprocal of the R value in the physical sense refers to the maximum amount of solid phase which the fluid can hold before the viscosity reaches an infinitely large value. The equation was introduced with an assumption that the particles were dispersed evenly in the fluid [6].

The viscosity is a measure of the resistance of the vicious flow and it is to a large extent dependent on the mobility of elements present in the fluid, such as atoms, molecules or ions which respectively reflect: the bond, the size and the configuration of the fluid components. In such a system one can observe a strong relationship between the measured viscosity and the structure. Slag is partially a polymer substance and some of its properties (e.g. viscosity, density, thermal and electric conduction) are dependent on its structure.

A. Shankar and associates [5] conducted research into the dynamic viscosity coefficient taking into consideration the changes in the rotary velocity of the spindle (5 types of rotary velocity ranging from 4 to 80 rpm) for slag systems: $CaO–SiO_2–MgO–Al_2O_3$ and $CaO–SiO_2–MgO–Al_2O_3–TiO_2$ in the basicity range: 0.72–1.23 and in temperature range: 1650 to 1873K. Liquidus temperatures were calculated using Thermo-Calc software so that the systems would be fully liquid. The increase in viscosity value (at the temperature of 1673K) suggested the presence of solid particles in the system. Their amount, however, was not defined. The authors put forward a thesis that viscosity depends to a large extent on the amount and size of solid particles and ions present in the system. The viscosity value is also affected by the degree of slag polymerization, which is in turn dependent on the silica activity – i.e. the possible Si–O–Si bonds as well as free oxygen ions O^2. The change in rotary velocity of the revolving element did not affect the dynamic viscosity of slag.

A. Kondratiev and associates [6] set out to verify the Einstein-Roscoe equation and conducted research into 4 different partially crystallized triple slag systems (among others $Al_2O_3–FeO–SiO_2$) during the cooling process from 1773 to 1633K and the heating process from 1633 to 1723K. In the course of continuous measurements (the value of torque changed with temperature) researchers noticed a sudden increase in viscosity at the temperature of approx. 1668K. That is when solid phase began to precipitate in slag. The parameters adjusted to model (3) are as follows: $R = 1.29$ and $n = 2.04$ and are comparable to the Roscoe model values.

S. Wright, L. Zhang, S. Sun, S. Jahanshahi [7] conducted research into the viscosity of slag (28%CaO–10%MgO–20%Al_2O_3–42%SiO_2) with the addition of solid particles of spinel ($MgAl_2O_4$). The shear rate was changed within the range of 0.5 to $3s^{-1}$ for less than 10% of the solid phase and the range of 0.3 to $1s^{-1}$ for bigger amounts of solid phase. When the content of solid phase was low (up to 10%) the apparent viscosity decreased down to 60%. In the extreme case of 22% of solid phase the viscosity decreased twofold in comparison to the maximum value while the shear rate was increasing. In the case of a 10% or higher content of solid phase the system showed the behavior of the Bigham's type (i.e. the shear stress increased linearly with the grow in the shear rate but there was a residual shear stress for zero shear rate). The residual shear stress suggests the existence of a flow boundary (up to 3Pa depending on the amount and size of solid phase).

S. Seok, S. Jung, Y. Lee, D. Min [3] also studied the viscosity of CaO–8%MgO–FeO–$Al_2O_3–SiO_2$ in solid-liquid dispersed system saturated with $2CaO·SiO_2$ in a temperature

range of 1673–1873K. They tested viscosity measurements in the temperature of 1873K for 3 different rotary velocities of the spindle (30, 60, 100 rpm). They concluded that the results of viscosity do not depend on the rotary velocity. The apparent viscosity of slag is dependent on the volume fraction of solid phase – estimated on the basis of slag composition.

Despite a significant amount of research conducted into the viscosity of slag systems the data available still seem insufficient to fully understand the structure and to predict the properties of slag commonly used in metallurgical processes. In case of complex slag systems the experimental data are only available for selected temperatures and for a narrow range of concentration. Due to difficult high temperature conditions comprehensive rheological research into slag is conducted in few centers and on a small scale [20, 21]. Each study of this sort brings new results and contributes to a better understanding of the rheological properties of slag

2. Experimental research and results

In order to measure the dynamic viscosity coefficient a force needs to be applied to the liquid system, and as a result the system is set into motion. The application of the force causes one layer of fluid to be transported towards another. Longer chains in fluid and polymerization cause the measurements to be more complicated. The dynamic viscosity is the best property of liquid glass and slag [17] when it comes to analyzing the internal structure of these fluids.

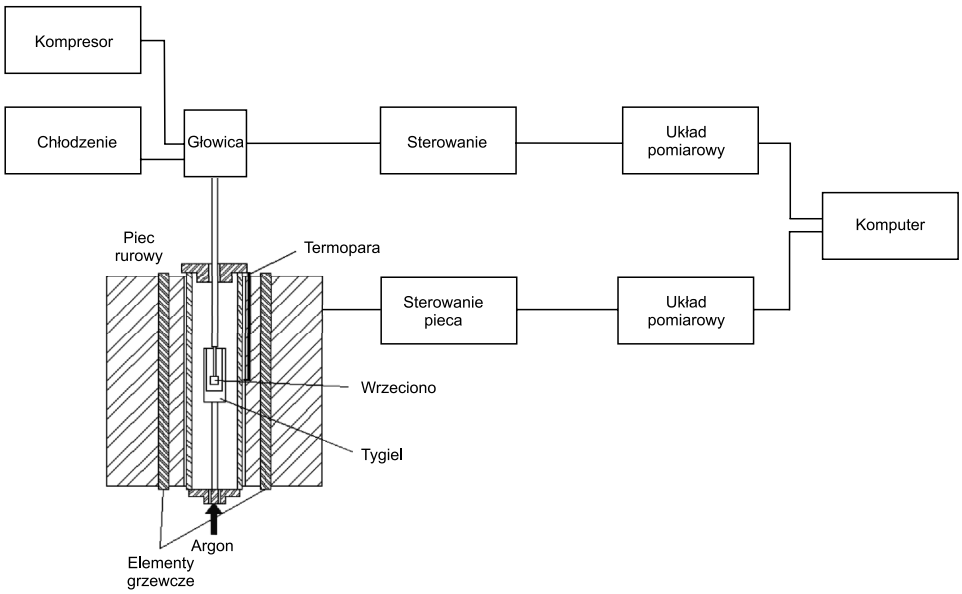

Fig. 1. Scheme of a high temperature rheometer FRS1600

Rys. 1. Schemat reometru wysokotemperaturowego FRS1600

Figure 1 shows a high temperature rheometer scheme, which is a prototype device developed in cooperation with Anton Paar company. Rheometer FRS1600 is equipped with a pipe furnace which makes it possible to obtain temperatures exceeding 1530°C.

The measuring head and the cooling system are the most important parts of the rheometer. Both the head and the furnace are operated remotely using a computer. There is a thermocouple in the furnace, which allows for temperature measurements. The resistance pipe furnace with a mullite pipe is controlled by means of Eurotherm. Inert gas (argon, its purity – 5.0) is introduced into the furnace. It allows to maintain a protective atmosphere in the course of long rheological measurements.

The calibration of the device was performed on a medium with a known value of viscosity coefficient in given temperature. In this case it was model glass Standardglas I der DGG (Kalk-Natron-Glas). Coefficients C_{SS} and C_{RS} were determined. These coefficients characterize the geometry of the measurement system for a shear rate which is possible to reach without causing a turbulent flow in the fissure.

The measurement system in the rheometer consists of concentric cylinders working according to Searle's method. According to this method there is a moving inner cylinder (spindle) and a motionless crucible (outer cylinder).

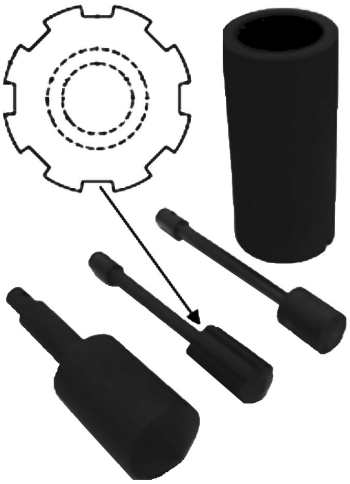

Fig. 2. Measurement systems used

Rys. 2. Stosowane systemy pomiarowe

Figure 2 presents measurement instruments used for rheological research into liquid and solid-liquid slag systems – in this case these were elements made of graphite. In this figure there is one type of crucible and three geometry types of spindles used for rheological research into liquid ionic solutions. The inner diameter of crucible was 30 mm, whereas the diameter of spindle amounted to 16 mm. The spindle which was used for research into solid-liquid systems had a perforated side surface in order to ensure a simple shear of the fluid and the most linear distribution of velocity in the rheological fissure. The fissure was 7 mm, which is a desirable size from the point of view of analyzing the rheological behavior of the fluid.

The rheological research focused on multi-component slag of the blast furnace type in the system $CaO–SiO_2–Al_2O_3–MgO$. This slag was obtained by means of a synthesis of pure components in liquid form: CaO – calcined powder, SiO2 – analytically pure quartz, Al_2O_3 – analytically pure, MgO – analytically pure calcined powder (made by a company called E. Merck). Special attention was paid to weighing the components. Before the components were weighed, they had been dried in the temperature of 120°C for 5 hours. Then they were carefully mixed. Slag was melted in an induction furnace (in a graphite crucible). The chemical compositions of slag samples were analyzed using an XFR spectrometer TWIN-X. The results of this analysis can be found in Table 1.

Table 1

Percentage and mass chemical composition

Components	1		2		3		4		5	
	%	g	%	g	%	g	%	g	%	g
CaO	44.23	22.11	41.61	20.81	40.34	20.17	37.66	18.83	35.56	17.78
MgO	6.46	3.23	6.07	3.04	5.88	2.94	5.49	2.74	5.18	2.59
Al_2O_3	7.07	3.54	12.76	6.38	15.60	7.80	21.29	10.65	25.65	12.83
SiO_2	42.24	21.12	39.55	19.78	38.18	19.09	35.56	17.78	33.61	16.80
B3	1.03		0.91		0.86		0.76		0.69	
B1	1.05		1.05		1.06		1.06		1.06	

Then equillibrium calculations of solid phase precipitation from liquid slag systems were conducted. The chemical composition and temperature of the analyzed slag constituted boundary conditions for which researchers calculated the type and amount of solid particles precipitating from the system. The mass of the sample used for this rheological experiment was 50g – this mass was used to calculate the mass content of particular oxides in the system. The equilibrium calculations were made using FactSage application. The obtained results are shown in table 2.

Thanks to FactSage thermodynamic database it was possible to determine the types and amounts of possible solid precipitations in the analyzed samples: sample 1 – $MgOCa_3O_3Si_2O_4$-merwinite, $CaSiO_3$-pseudowollastonite; sample 4 – $Ca_2Al_2SiO_7$–gehlenite; sample 5 – $Ca_2Al_2SiO_7$-gehlenite. In case of sample 2 and 3 solid particles appear only when the temperature rises over 1270°C or 1250°C respectively. These temperatures are theoretical ones and were not applied in the course of rheological experiments. Due to certain differences in behavior observed for sample 4, only selected samples 1, 2, 3 and 5 were presented in the Table 2.

The behavior and influence of Al_2O_3 on viscosity in liquid silica systems resembles that of SiO_2. This oxide can also behave as a cross-linking element of the fluid structure in systems with higher basicity. Tetrahedral ion AlO_4^{4-} can be produced in such systems. It is characterized by high durability due to a big charge capacity – which is compensated by

the cation (Ca^{2+}). The production of AlO_4^{4-} ion can cause an increase in the resistance of flow. That is why the viscosity models used to estimate the dynamic viscosity coefficient show lower viscosity by approx. 40% than the one obtained in the course of measurements. It is true, however, that there are few experimental data available in literature to explain this discrepancy [18].

Table 2

A comparison of experimental results and calculations

No.	T [°C]	γ [s^{-1}]	η_{measur} [Pa·s]	mass of sol-part. [g]	mass of sol-part. [%]
1	1330	15–150	0.797–0.768	1.88	3.760
	1340	15–150	0.730–0.695	0.83	0.416
	1350	15–150	0.278–0.257	0.00	0.00
	1400	15–150	0.454–0.427	0.00	0.00
2	1330	15–150	1.310–1.140	0.00	0.00
	1340	15–150	1.270–1.020	0.00	0.00
	1350	15–150	1.330–1.140	0.00	0.00
	1400	15–150	0.774–0.598	0.00	0.00
3	1330	15–150	1.863–2.35	0.00	0.00
	1340	15–150	1.207–1.159	0.00	0.00
	1350	15–150	1.081–1.041	0.00	0.00
	1400	15–150	0.705–0.664	0.00	0.00
5	1330	15–150	25.890–4.700	13.62	6.812
	1340	15–150	16.370–12.61	11.46	5.730
	1350	15–150	16.280–10.81	9.14	4.571
	1400	15–150	2.198–1.713	0.00	0.00

Table 3 presents measurements schedules prepared in the course of rheological analysis of the above mentioned slag systems.

Table 3

Chosen schedule of measurement

Measurement stage	$\dot{\gamma}$ [s–1]	T [°C]
Step I	15	cooling/homogenization
Step II	A) 15-150 (log) B) 150-15 (log)	Const.
Step III	A) 15-180 (log) B) 180-15 (log)	Const.
Step IV	A) 30, 60, 80, 120, 80, 60, 30, B) 5, 200, 15, 200, 15, 150, 15, 150,	Const.

Measurement schemes, which are presented in table 3, brought results that were later on used to prepare Fig. 3. The data used include step II and III – useful in describing the course of hysteresis reflecting the changes in shear stress.

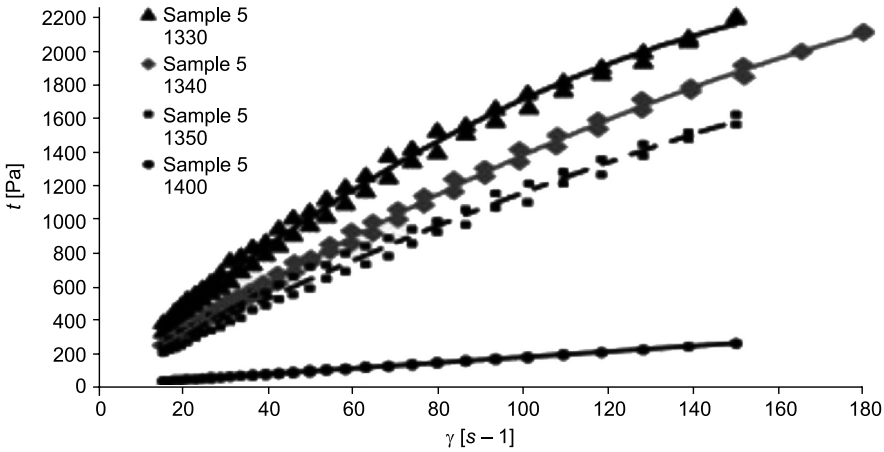

Fig. 3. Flow curves for sample 5 in different temperatures

Rys. 3. Krzywe płynięcia dla próbki 5 w różnych temperaturach

Figure 3 presents the changes in shear stress in the function of shear rate, a standard rheological curve known as – the flow curve. In this case it is a fluid-solvent system in which solid elements precipitated due to a drop in temperature and a change in chemical composition. Sample 5 represents the slag system with the highest content of Al_2O_3 at the level of 25.65 wieght percent.

Table 4 shows function formulas for selected trend lines with the highest regression coefficient R^2 and a set confidence coefficient $\alpha = 0.01$ assuming that the numerousness of each sample is $N = 60$ and the degrees of freedom amount to $n = 58$. The table also shows

Table 4

Function equations for trend lines and τ_0 for sample 5

T [°C]	Sample 5				Solid elements [%]
	Function	R^2	α/n	τ_0 [Pa]	
1330	$-0{,}0507x^2 + 21{,}582x + 65{,}418$	0.994	0.01/58	65.42	13.62
1340	$-0{,}0259x^2 + 16{,}301x + 11{,}461$	0.998	0.01/58	11.46	11.46
1350	$-0{,}0175x^2 + 12{,}904x + 43{,}252$	0.989	0.01/58	43.25	9.14
1400	$1{,}6607x + 7{,}1967$	0.996	0.01/58	7.19	0.00

the calculated value of τ_0 representing a theoretical flow boundary. Each of the calculated regression coefficient was compared to $R_{critical}$ from table 9.2 [22] with a given confidence

coefficient and appropriate degrees of freedom. In case of temperature 1400°C, in which theoretically solid elements are not present, one can observe a change in the function type from a quadratic to a linear one if the criterion of regression coefficient – *R* is assumed.

The results presented in table 4 suggest a change in a rheological character of the system – it becomes very similar to an ideally viscous Newtonian body. It is assumed that this system is fully liquid. A total resemblance of a fully liquid system to an ideal Newtonian body seems to reflect the opinions presented in some of the research papers [2–13].

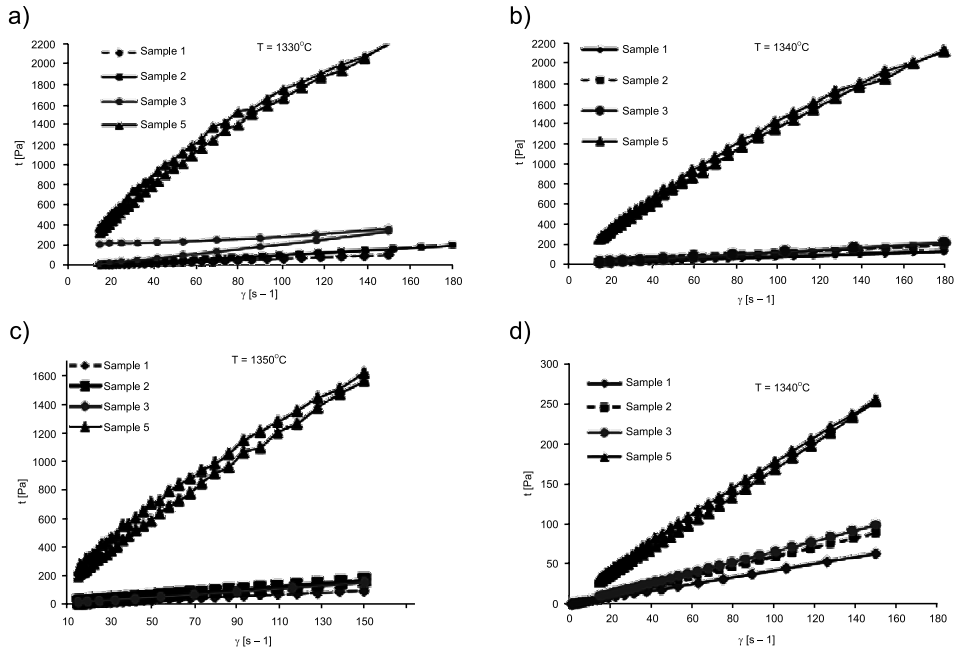

Fig. 4. Flow curves for samples in temperatures a) 1330°C, b) 1340°C, c) 1350°C, d) 1400°C

Rys. 4. Krzywe płynięcia dla próbek w temperaturach: a) 1330°C, b) 1340°C, c) 1350°C, d) 1400°C

Figure 4 presents flow curves for selected samples in the temperature range of 1330–1400°C. Samples 1, 2, 3, 5 represent different chemical composition of slag with admixtures of Al_2O_3. It is clear that slag with the highest concentration of aluminum oxide changes its rheological character as a result of a decrease in temperature. The remaining samples show resemblance to ideally viscous Newtonian flow, in all measured temperatures. Only in case of Fig. 4a for sample 3 the flow curve shows a slight deviation from the similarities to an ideally viscous Newtonian body – it is described by a curve in the form of a slight hysteresis of the flow curve.

Figures 4a, b and d refer to samples which show changes in shear stress depending on the concentration of Al_2O_3 in the system. An increase in aluminum oxide concentration leads to a rise in shear stress (if the shear stress rate values remain constant).

The change in rheological character of the analyzed fluid-solid elements system is caused by the amount of solid elements that precipitated from the system due to a decrease in temperature, to change of shape and size of these elements.

Despite the content of solid elements (calculated theoretically) sample 1 shows similarities to a Newtonian body in temperatures 1330°C and 1340°C (respectively 3,76 and 0,86%). It may be the result of the low mass of the precipitated elements and totally different (in terms of quality) solid elements precipitated in a system with a different chemical composition (described above) in comparison to that of sample 5. In the case of sample 3, however, there are no solid element precipitating in given temperatures according to thermodynamic calculations for a given chemical composition. Despite this fact, there are clear differences between this sample and a Newtonian fluid – it may suggest a significant influence of the internal structure of the fully liquid solution on the rheological character of the fluid.

3. Conclusions and observations

The following can be concluded on the basis of the conducted research and analyses:

- For the slag system $CaO\text{-}SiO_2\text{-}MgO\text{-}Al_2O_3$ (theoretically in a totally liquid state) in the temperatures above 1400°C the analyzed liquid ionic solutions resemble ideally viscous Newtonian fluids;
- In case of the analyzed systems with solid particles the nature of the fluid changes – it is no longer a Newtonian fluid but a system diluted by shearing (a pseudoplastic one) and the shear rate influences the value of the dynamic viscosity coefficient, an increase in $\dot{\gamma}$ causes the viscosity to decrease;
- The amount of solid particles influences the changes in rheological character of the fluid/suspension. Even a small amount of solid particles in the system approx. 11.46-17.55% changes the type of the analyzed fluid from a Newtonian one to a system diluted by shearing. In case of the analyzed system it is not necessary for solid elements to be present in the amount of approx. 40% in order to change its character;
- The type and amount of solid elements in the system and the type of complex anion lattice (in a fully liquid system and also in the remaining liquid part in the solid-liquid system) is an important issue from the point of view of changes in viscosity changes and the rheological character of the fluid. As far as solid-liquid slag systems are concerned, it seems necessary to include shear rate when using Einstein's equation;
- Adding Al_2O_3 to the slag systems causes the amount of solid particles to increase in lower temperatures. It also leads to the polymerization of the viscous part of the system. The slag system changes its character from Newtonian to pseudoplastic.

The question of the internal structure of the strongly polymerized fully liquid slag systems with the addition of solid particles (as presented above) still remains open. So does the influence of the applied shear stress on such a system – this in turn affects the dynamic viscosity coefficient and potentially triggers changes in rheological character of the fluid.

These experiments and studies were conducted as part of statutory research of MEiN number 11.11.110.081.

References

[1] Sasaki Y., Urata H., Iguchi M., Hino M., *Stress Relaxation Behavior with Molten $CaO–SiO_2–Al_2O_3$ Slag*, ISIJ International, vol. 46, 2006, nr 3, pp. 385-387.

[2] Seetharaman S., Mukai K., Sichen D.U., *Viscosity of slags – an overview*, Steel Research Int., vol. 76, 2005, nr 4, pp.267-278.

[3] Seok S., Jung S., Lee Y., Min D., *Viscosity of highly basic slags*, ISIJ Int., vol. 47, 2007, nr 8, pp.1090-1096.

[4] Viswanathan N.N., Ji F.-Z., Sichen D.U., Seetharaman S., *Viscosity Measurements on Some Fayalite Slags*, ISIJ International, vol. 41, 2001,nr 7, pp. 722-727.

[5] Shankar A., Görnerup M., Lahiri A.K., Seetharaman S., *Experimental Investigation of the Viscosities in $CaO–SiO_2–MgO–Al_2O_3$ and $CaO–SiO_2–MgO–Al_2O3–TiO_2$ Slags*, Metallurgical and Mat. Trans. B, vol. 38B, 2007, nr 12, p. 911.

[6] Kondratiev A., Zhao B., Raghunath S., Hayes P.C., Jak E., *New tools for viscosity measurement and modeling of fully liquid and partly crystallised slags*, Proceedings of EMC 2007.

[7] Wright S., Zhang L., Sun S., Jahanshahi S.,*Viscosity of a $CaO–MgO–Al_2O_3–SiO_2$ Melt Containing Spinel Particles at 1646K*, Metallurgical and Mat. Trans. B, vol. 31B, 2000, nr 2, pp. 97-104.

[8] Kondratiev A., Hayes P.C., Jak E., *Development of a Quasi-chemical Viscosity Model for Fully Liquid Slags in the Al_2O_3–CaO–'FeO'–MgO–SiO_2 System. Part 1. Description of the Model and Its Application to the MgO, MgO–SiO_2, Al_2O_3–MgO and CaO–MgO Sub-systems*, ISIJ International, Vol. 46 (2006), No. 3, pp. 359-367.

[9] Kondratiev A., Hayes P. C., Jak E., *Development of a Quasi-chemical Viscosity Model for Fully Liquid Slags in the Al_2O_3–CaO–'FeO'–MgO–SiO_2 System. Part 2. A Review of the Experimental Data and the Model Predictions for the Al_2O_3–CaO-MgO, CaO–MgO–SiO_2 and Al_2O_3–MgO–SiO_2 Systems*, ISIJ International, Vol. 46 (2006), No. 3, pp. 368-374.

[10] Kondratiev A., Hayes P.C., Jak E., *Development of a Quasi-chemical Viscosity Model for Fully Liquid Slags in the Al_2O_3–CaO–'FeO'–MgO–SiO_2 System. Part 3. Summary of the Model Predictions for the Al_2O_3–CaO–MgO–SiO_2 System and Its Sub-systems*, ISIJ International, Vol. 46 (2006), No. 3, pp. 375-384.

[11] Kondratiev A., Hayes P.C., Jak E., *Development of a Quasi-chemical Viscosity Model for Fully Liquid Slags in the Al_2O_3–CaO–'FeO'–MgO–SiO_2 System. The Experimental Data for the 'FeO'–MgO–SiO_2, CaO–'FeO'–MgO–SiO_2 and Al_2O_3–CaO–'FeO'–MgO–SiO_2 Systems at Iron Saturation*, ISIJ International, Vol. 48, (2008), No. 1, pp. 7-16.

[12] Kondratiev A., Jak E., *Review of Experimental Data and Modeling of the Viscosities of Fully Liquid Slags in the Al_2O_3–CaO–'FeO'–SiO_2 System*, Metallurgical And Materials Transactions B Volume 32b, December 2001, 1015.

[13] Mills K.C., Sridhar S., *Viscosities of Ironmaking and Steelmaking Slags*, Ironmaking & Steelmaking, 1999, vol. 26, pp. 262-268.

[14] Ferguson J., Kembłowski Z., *Reologia stosowana płynów*, Wydawnictwo MARCUS, Łódź 1995.

[15] Xie D., Mao Y., Zhu Y., *Viscosity and flow behaviour of TiO_2-containing blast furnace slags under reducing conditions*, VII International Conference on Molten Slags Fluxes and Salts, The South African Institute of Mining and Metallurgy, 2004.

[16] Song M., Shu Q., Sichen D.U., *Viscosities of the Quaternary $Al_2O_3–CaO–MgO–SiO_2$ Slags*, Steel Research Int. 82, 2011, No. 3.

[17] Mills K., *The estimation of slag properties*, Department of Materials, Imperial College, London, UK, Short course presented as part of Southern African Pyrometallurgy 2011.

[18] Boccaccini A.R., Riazc S., Moisescu C., *On the viscosity of glass-crystal systems*, Journal Of Materials Science LETTERS 20, 2001, 1803-1805.
[19] Schramm G., *Reologia- Podstawy i zastosowania*, Haake GmbH, OWN PAN, Poznań 1998.
[20] Migas P., Korolczuk-Hejnak M., Karbowniczek M., *Rheological measurements of selected grades of liquid steels*; Rheology – theory and application, Vol. 2 EKMA, Warszawa 2011.
[21] Korolczuk-Hejnak M., Migas P., *Selected grades of steel as rheologically defined liquid bodies*, No. 2, Vol. 57, 2012.
[22] Volk W., *Statystyka stosowana dla inżynierów*, WNT, 1973.