BUDOWNICTWO
CZASOPISMO TECHNICZNE
TECHNICAL TRANSACTIONS
CIVIL ENGINEERING
WYDAWNICTWO POLITECHNIKI KRAKOWSKIEJ
2-B/2012
ZESZYT 3
ROK 109
ISSUE 3
YEAR 109

DANICA KOŠIČANOVÁ, PETER KAPALO*

A CONSUMER MODEL FOR RESEARCHING THE INTEGRATIVE EFFECTIVENESS OF RENEWABLE ENERGY SOURCES – A DESIGN CONCEPT OF TECHNICAL EQUIPMENT

MODEL UŻYTKOWY W BADANIU INTEGRACYJNEJ SKUTECZNOŚCI ODNAWIALNYCH ŹRÓDEŁ ENERGII – PROJEKTOWA KONCEPCJA WYPOSAŻENIA TECHNICZNEGO

Abstract

This paper concerns an experimental building that makes a part of the research faculty. The experimental building will be raised in the laboratory hall, whereas the whole construction will be placed in climate chambers with simulated external temperatures. The parameters of peripheral structures correspond with the parameters of a passive house. This paper includes systems to ensure the internal environment in rooms with the help of air conditioning and heating installations using renewable energy sources.

Keywords: heating systems, HVAC

Streszczenie

Niniejszy artykuł dotyczy eksperymentalnego budynku stanowiącego część wydziału badawczego. Budynek eksperymentalny zostanie wzniesiony w sali laboratoryjnej, cała konstrukcja zaś umieszczona w komorach klimatycznych z symulacją temperatur zewnętrznych. Parametry struktur peryferyjnych są zgodne z parametrami domu pasywnego. W artykule zaprezentowano systemy, które tworzą wewnętrzne środowisko pomieszczeń za pomocą instalacji klimatyzacyjnych i grzewczych wykorzystujących odnawialne źródła energii.

Słowa kluczowe: systemy grzewcze, HVAC

* Prof. PhD. Eng. Danica Košičanová, PhD. Eng. Peter Kapalo, Department of Building Services, Institute of Architectural Engineering, Technical University of Košice.

1. Description of the experimental building

1.1. General description of the building

The experimental house is designed in passive standards in terms of building structures. On the basis of calculated balances for the needs of heat, demand for hot water and the need for ventilation in the building, variants of heating and ventilating were designed. Even though this paper does not concern hot water, proposed distribution of hot water and energy required for domestic purposes is also included in the research. The building is part of the research and developmental environment meant to ensure sustainable interoperability and integration of research into the space of an efficient use of more compound systems based on renewable energy sources. The building is located in a chamber which will simulate the outdoor temperature excluding the effects of sunlight. The whole technological park will use biomass technology for an efficient use of hydrogen, solar energy, geothermal sources and hydrogen batteries as alternative sources of energy. The experimental building will be incorporated into the project as one of energy appliances. The source of energy will be a high-capacity storage tank located under the Technology Park. The following figure shows the experimental building.

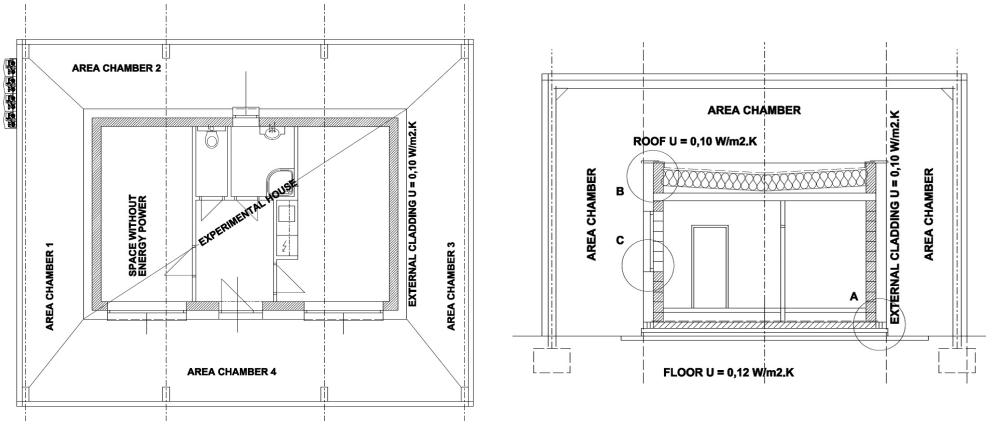

Fig. 1. Ground plan and cross section of the experimental building

Rys. 1. Rzut poziomy oraz przekrój poprzeczny budynku eksperymentalnego

2. Heating design

The purpose of this design is a combination of several applicable heating systems. One part of the building will be unheated; the other part of the building will be heated by different systems. The rooms will be equipped with flexible and stable heat sensors. The following figures show low-temperature radiant systems and a conventional low-temperature heating system designed in the experimental building.

The main power supply is conducted to the distributor located outside the chambers. Each system will have its own mixing hub located above the main divider. Radiant systems are designed as follows – wall and floor heating, ceiling heating capillary; wall heating is designed for one room only, ceiling and floor heating is designed for the whole heating space.

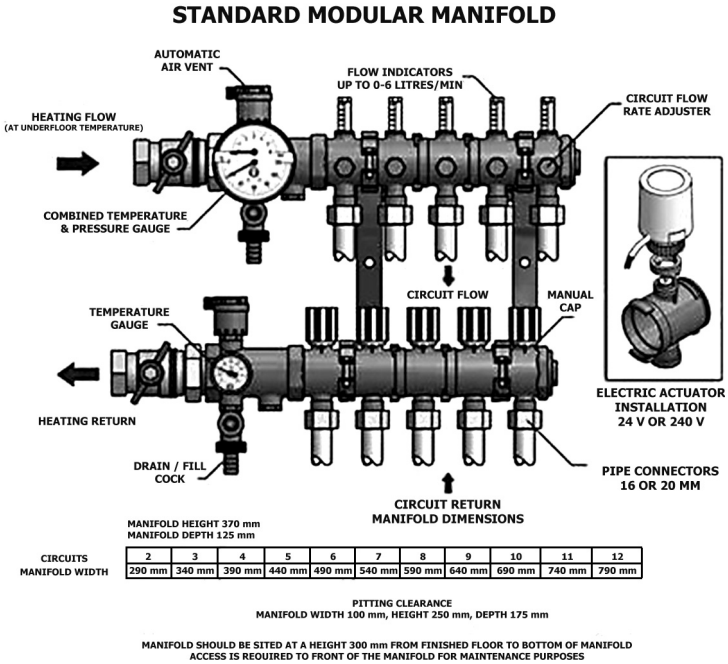

Fig. 2. Standard modular manifold used in heating systems (floor, radiators and wall)

Rys. 2. Standardowy kolektor modularny wykorzystywany w systemach grzewczych (podłoga, grzejniki i ściana)

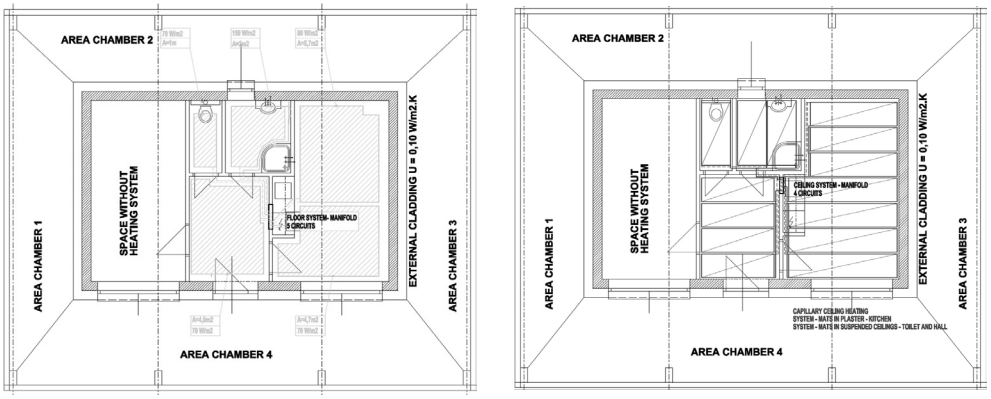

Fig. 3. Floor and wall heating designed in the experimental building

Rys. 3. Ogrzewanie podłogi i ściany zaprojektowane dla budynku eksperymentalnego

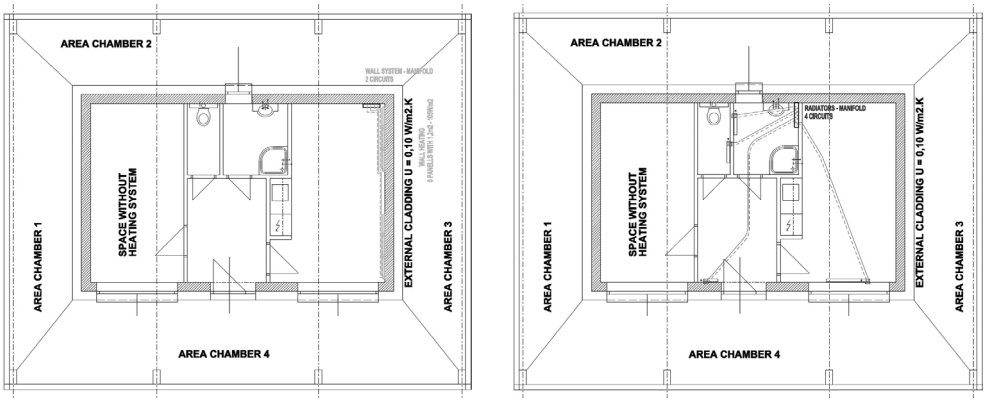

Fig. 4. Wall heating and low-temperature radiator heating
in the experimental building

Rys. 4. Ogrzewanie ściany i ogrzewanie niskotemperaturowe
w budynku eksperymentalnym

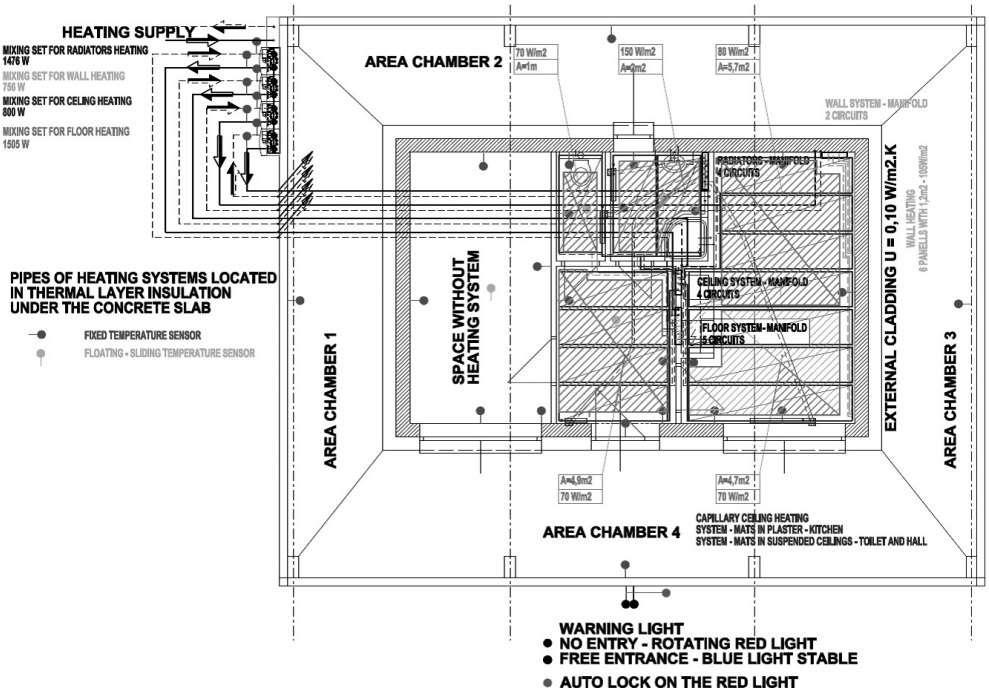

Fig. 5. Floor plan showing stable and movable sensors for measuring
the temperature in the experimental building

Rys. 5. Plan piętra przedstawiający stałe i ruchome czujniki mierzące temperaturę
w budynku eksperymentalnym

3. Variants of the proposed HVAC systems

The purpose of this research is to investigate temperature, humidity, air velocity and the concentration of carbon dioxide in a place of residence. Its aim is to provide optimal ventilation and heat treatment for various conditions of using a room. The project was prepared to test different values in different rooms: offices, classrooms and conference rooms. They are pursued by different parameters of air.

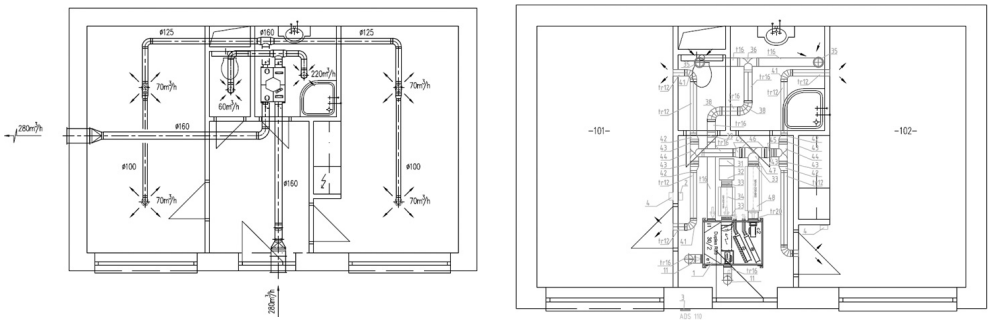

Fig. 6. Variant of the HVAC systems solution in the experimental building

Rys. 6. Wariant rozwiązania systemów HVAC w budynku eksperymentalnym

Various studies show the scale of carbon dioxide concentration per person – see Table 1.

Table 1

Due to increased CO_2 concentrations

CO_2 concentrations [ppm]	The effecton the body
330 - 400	Outdoor air
450 – 1,000	Pleasant feeling – good level
1,000 – 2,000	Sleepiness – worse air
2,000 – 5,000	Possible headaches
over 5,000	Discomfort, rapid heartbeat
over 15,000	Breathing problems
over 30,000	Dizziness and indisposition
over 60,000	Blackout

4. Conclusions

The experimental building will be equipped with heating and air conditioning systems. These systems can be freely switched off, combined and compared with the results of measurement in a room that will lack a heat source. The whole system will be supported by energy simulation. On the basis of the measurement results and after fine-tuning simulations in the experimental building, relevant outcomes, applicable in the practice of designing passive buildings, will be obtained in compliance with the basic hygienic requirements in terms of structures, an internal environment and the design and use of heating or ventilating systems.

This paper was elaborated in the framework of the international scientific-technical cooperation between Slovakia and Romania in the form of the APVV Project under the title Energetic Efficiency of Ventilation System, Identification Project No. SK-RO-0010-1 and project SF ITMS code 26220220064 – VUKONZE.

References

[1] EuroACE, *Towards Energy Efficient Buildings in Europe*, final report June (ec.europa.eu), 2004.

[2] STN EN 13 779:2007 *Vetranie nebytových budov. Všeobecné požiadavky na vetracie a klimatizačné zariadenia*.

[3] STN EN 15251 *Vstupné údaje o vnútornom prostredí budov na navrhovanie a hodnotenie energetickej hospodárnosti budov – kvalita vzduchu, tepelný stav prostredia, osvetlenie a akustika*.

[4] Kapalo P., Pauliková A., Muntea C., Domnita F., *Legislative requirements for ventilation of buildings in Slovakia and Romania*, Instalatii pentru inceputul mileniului trei: Cresterea performantei energetice a cladirilor si a instalatiilor aferente, Published in Bucuresti, MATRIX ROM, 2011.