BUDOWNICTWO
CZASOPISMO TECHNICZNE
TECHNICAL TRANSACTIONS
CIVIL ENGINEERING
WYDAWNICTWO POLITECHNIKI KRAKOWSKIEJ
1-B/2009
ZESZYT 5
ROK 106
ISSUE 5
YEAR 106

BORIS BIELEK, MILAN BIELEK*

NEW RESULTS OF EXPERIMENTAL RESEARCH INTO REGIME OF NATURAL PHYSICAL CAVITY OF DOUBLE-SKIN TRANSPARENT FACADE UNDER WINDLESS CLIMATE CONDITIONS

NOWE INFORMACJE DOTYCZĄCE WARUNKÓW W NATURALNIE WENTYLOWANEJ SZCZELINIE PODWÓJNEJ FASADY TRANSPARENTNEJ PRZY BEZWIETRZNEJ POGODZIE – BADANIA DOŚWIADCZALNE

A b s t r a c t

Theory of natural physical cavities and its application references. Verification of the theory by application of *in situ* experiment. Experimental research of convective air flow through natural physical cavity of corridor type with year-round open circuit and with alternating air inlet and outlet modules. Specifics of convective air flow in natural cavity – new research results. Confrontation of the theory and experiment. Scientific polemic to the new research results.

Keywords: *double-skin transparent facade, natural physical cavity, experiment in situ, climate-dependent process – problem, convective air flow*

S t r e s z c z e n i e

Teoria dotycząca naturalnie wentylowanych szczelin i referencje związane z ich stosowaniem. Weryfikacja teorii przez eksperymenty polowe. Eksperymentalne badania konwekcyjnego ruchu powietrza w naturalnie wentylowanej szczelinie typu korytarzowego w skali całego roku i przy zmiennych modułach wlotu i wylotu powietrza. Specyfika konwekcyjnego ruchu powietrza w naturalnie wentylowanej szczelinie – nowe informacje. Konfrontacja teorii i eksperymentu. Naukowa polemika z nowymi informacjami.

Słowa kluczowe: *podwójna fasada transparentna, naturalnie wentylowana szczelina, badania polowe, problem procesu zależnego od warunków klimatycznych, konwekcyjny ruch powietrza*

* Doc. Ing. Boris Bielek, PhD., prof. dr. h.c. Ing. Milan Bielek, DrSc., Faculty of Civil Engineering, Slovak University of Technology, Bratislava, Slovakia.

1. Introduction

Formation of the theory of natural physical cavities is based on the modern scientific disciplines:

– solar – thermal technology and
– aerodynamics of buildings or aerodynamics of cavities.

It is confirmed by calculation experiments, employing climate dependent dynamic simulation software in marginal conditions of outdoor climate model in the form of test reference year and has been verified by our research team by application of double-skin transparent facades on two important architectural works with characteristics of intelligent buildings:

– the new building of the National Bank of Slovakia in Bratislava – Photo 1a),
– the modernized building of Východočeská Energetika in Hradec Králové – Photo 1b).

During the next stage, being a part of the mentioned theory verification, we carried out an extensive long-term *in situ* experiment [1] (its duration was 18 months) in the building of the National Bank of Slovakia in Bratislava – Photo 2 [2].

a) b)

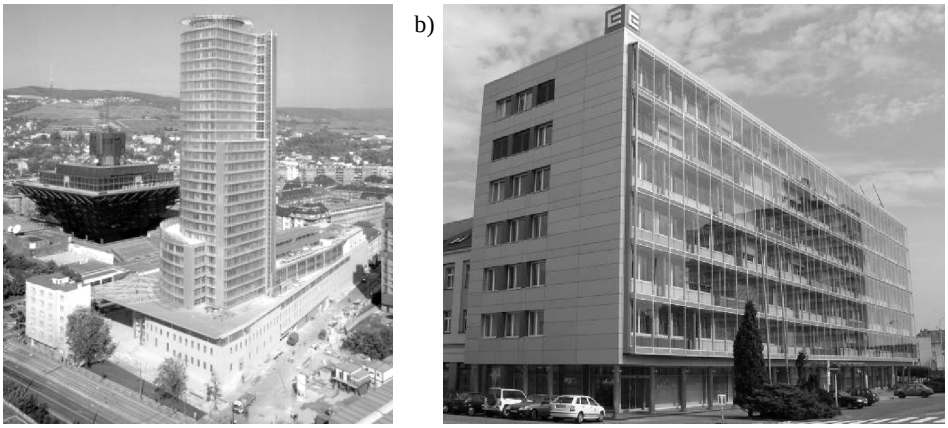

Photo 1. Application references from the development of theory and practice of natural physical cavities and construction design of double-skin transparent facades on: a) new building of the National Bank of Slovakia in Bratislava; b) modernized building of Východočeská Energetika in Hradec Králové

Fot. 1. Przykład realizacji budynków ilustrujących rozwój teorii i praktyki w zakresie fasad ze szczelinami powietrznymi i podwójnymi powłokami transparentnymi: a) nowy budynek Narodowego Banku Słowackiego w Bratysławie, b) zmodernizowany budynek Východočeská Energetika in Hradec Kralove

2. Subject, objective and methodology

The subject of this paper is the natural physical cavity of corridor type with year-round open circuit. Our objective is to present new results of our research into the field of energy regime in the natural physical cavity.

a) b)

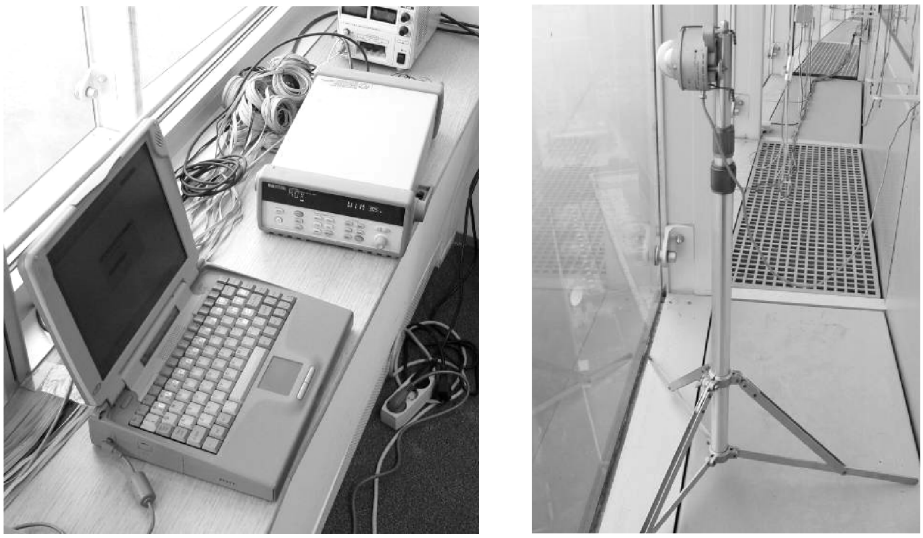

Photo 2. Documentation of long-term experiment of physical regime of the cavity carried out by *in situ* method in the building of the National Bank of Slovakia in Bratislava: a) view of the central unit of measuring device situated in the core of the building; b) view of the configuration of the experiment in the cavity

Fot. 2. Dokumentacja długotrwałych badań eksperymentalnych *in situ* warunków fizycznych w szczelinie, prowadzonych w budynku Narodowego Banku Słowackiego w Bratysławie: a) widok jednostki centralnej urządzenia pomiarowego usytuowanego w rdzeniu budynku, b) widok usytuowania urządzeń pomiarowych w szczelinie

The applied methodology presented in this paper is the long-term *in situ* experiment carried out on the double-skin facade of the National Bank of Slovakia building [1] and its confrontation with the theory. Experimentally tracked physical parameters in the regime of natural cavity, their scanning and recording as well as complex measuring technology have been documented [1].

3. New results acquired from the long-term experiment – confrontation of the theory and the experiment

Since we are limited by the extent of this paper, it is not possible for us to present the new research results into the energy regime of natural physical cavity concerning all climate situations which occurred in the course of the experiment during the year. For this reason we would like to focus in this paper only on the climate situations which are characterized by a period of warm, sunny and windless weather ($v_{w,h} \leq 0{,}5\ \mathrm{m \cdot s^{-1}}$). To document this condition we have chosen from the whole long-term experiment one record of three successive days – Fig. 1. The following parameters are recorded there: characteristic air temperatures of indoor and outdoor climate, characteristic air temperatures in the cavity, characteristic surface temperatures in the cavity, relative air humidity, intensity of global solar radiation and the velocity of air flow through the cavity. Wind

velocity and direction were controlled by a meteorological station as a part of the experiment (for more information see [1]). Following the research into the long-term experiments concerning loads on natural physical cavity of the double-skin transparent facade as effected by outdoor temperatures, relative humidity and effects of global solar radiation (with no wind) we can state:

- convective air flow occurs in the cavity in every stress interval and its velocity ranges from $0{,}05 \leq v_m$ [m·s^{-1}] $\leq$ 0,2 to 0,3 – Fig. 1,
- under the effects of global solar radiation (9.00 AM – 6.00 PM) the velocity of convective air flow in the cavity increases – Fig. 1,
- as a result of alternating position of air inlet and air outlet modules the energy regime in the cavity is characterized by inhomogeneity – Fig. 2,
- there are 3 characteristic areas for the thermal and aerodynamic regime in the cavity:
  - area of increasing temperatures along the height of the cavity in the air inlet module – convective air flow movement,
  - small area of particularly high temperatures in the upper part of the air inlet module of the cavity – stagnation of warm air,
  - large area of high temperatures in the air outlet module of the cavity – stagnation of warm air – Fig. 2,
- increase of air temperature in the cavity is not linear as it is assumed in present theoretical calculations – Fig. 3,
- air of outdoor climate entering into an air distribution channel of the natural cavity will suddenly heat up in the air distribution channel (radiation and convection from heated walls made of an alloy on aluminium basis) – Fig. 2,
- increase in temperature is higher in the lower part of the cavity than in the upper part – Fig. 3,
- in the upper part of the air inlet module of the cavity a small stagnant air "cushion" of particularly high temperatures is formed – Fig. 2,
- in the lower two thirds of the air outlet module of the cavity a big "cushion" of stagnant air of high temperatures is formed – Fig. 2,
- in the upper part of the air outlet channel the flowing air will partially cool down as a result of lower surface temperatures of the walls of the air distribution channel (radiation and convection from heated walls made of an alloy on aluminium basis) – Fig. 2,
- air flow rate through the air distribution channel is lower than it was assumed in theoretical calculations because its cross-section is defined only by one of the two modular axes of the facade (at the same velocity v_m [m·s^{-1}] of convective air flow),
- increase of air temperature in the natural physical cavity in a period of warm, sunny, windless weather and under the effect of global solar radiation on the outer transparent wall is based on the results of the long-term experiment of higher values max $\Delta\theta_{am} \approx 22$ to 24 K at max $I_m \approx 600$ W·m^{-2} as it was determined by theoretical calculation max $\Delta\theta_{am} \approx 15$ to 16 K at max $I_m \approx 800$ W·m^{-2} – Fig. 4 and value max $\Delta\theta_{am} \approx 11$ to 12 K at max $I_m \approx 600$ W·m^{-2} – Fig. 4.

Temperature increase values in the natural cavity under the comparable load as effected by global solar radiation $I_m \approx 600$ W·m^{-2} observed during the experiment are twice as high as compared to the theoretical calculation – Figs. 4 and 5. This is the most important conclusion which has been drawn from the long-term experiment in the field of climate load on the cavity in windless conditions ($v_{w,h} \leq$ 0,5 m·s^{-1}).

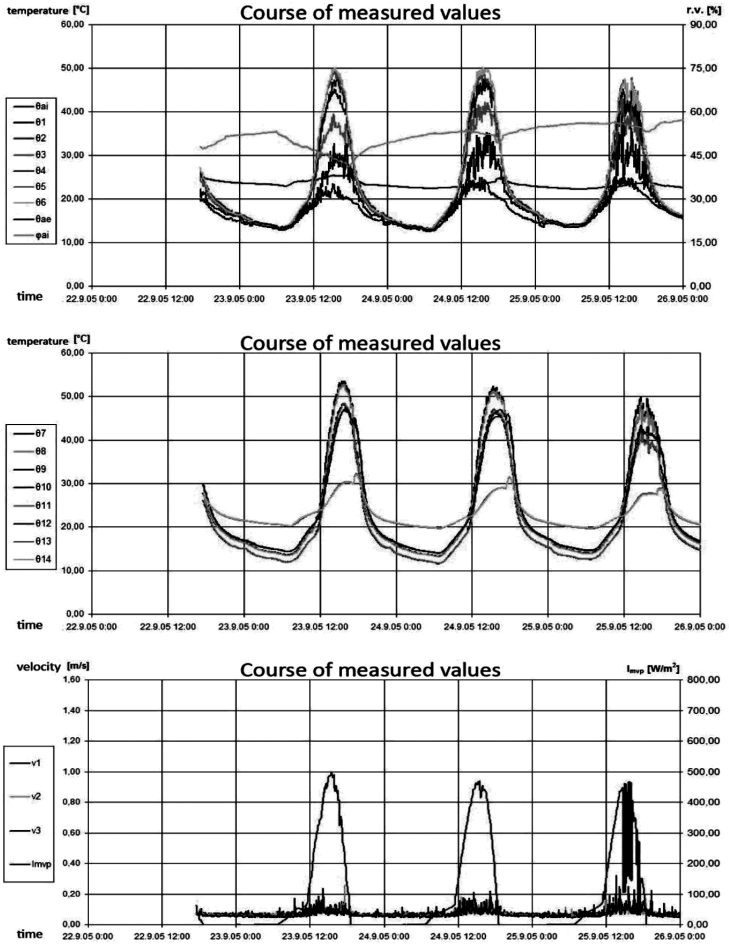

Fig. 1. Example of experimentally acquired physical parameters of indoor climate in the cavity of southwest aspect (SW). Air temperatures of indoor θ_{ai} [°C] and outdoor climate θ_{ae} [°C]. Air temperatures in the cavity θ_1 to θ_8 [°C]. Surface temperatures in the cavity θ_0 to θ_{12} [°C]. Surface temperatures on the internal side of double-skin facade θ_{13} to θ_{14} [°C]. Relative air humidity φ_{ae} and φ_{ai} [%]. Velocities of air flow in the cavity v_1 to v_3 [m·s^{-1}]. Global solar radiation transmitted through the outer transparent wall $I_{m,v,p}$ [W·m^{-2}]

Rys. 1. Przykład zebranych podczas badań eksperymentalnych parametrów fizycznych klimatu wewnętrznego w szczelinie o orientacji południowo-zachodniej (SW). Temperatura powietrza wewnętrznego θ_{ai} [°C] i zewnętrznego θ_{ae} [°C]. Temperatura powietrza w szczelinie od θ_1 do θ_8 [°C]. Temperatura powierzchni w szczelinie od θ_9 do θ_{12} [°C]. Temperatura powierzchniowa na wewnętrznej stronie podwójnej fasady od θ_{13} do θ_{14} [°C]. Wilgotność względna powietrza φ_{ae} i φ_{ai} [%]. Prędkość ruchu powietrza w szczelinie od v_1 do v_3 [m·s^{-1}]. Całkowite promieniowanie słoneczne przepuszczone przez zewnętrzną powłokę transparentną $I_{m,v,p}$ [W·m^{-2}]

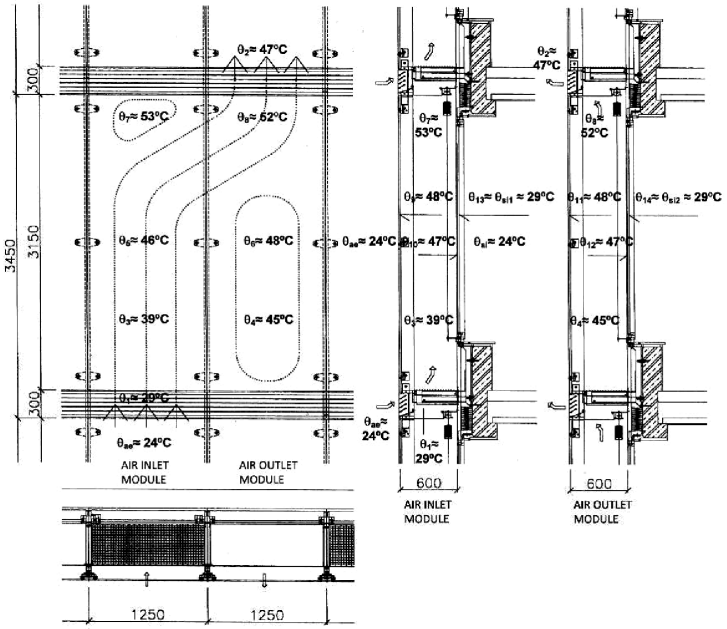

Fig. 2. Natural physical cavity of double-skin transparent facade of the National Bank of Slovakia building in Bratislava. Climate situation: period of warm, sunny and windless weather $v_{w,h} < 0{,}5\ \mathrm{m \cdot s^{-1}}$. Distribution of characteristic temperatures. Characteristic movement of convective air flow

Rys. 2. Szczelina powietrzna z naturalnym przepływem powietrza w dwupowłokowej fasadzie transparentnej Narodowego Banku Słowackiego w Bratysławie. Warunki klimatyczne: okres ładnej, bezwietrznej pogody letniej $v_{w,h} < 0{,}5\ \mathrm{m \cdot s^{-1}}$. Rozkład charakterystycznych wartości temperatury i konwekcyjnego ruchu powietrza

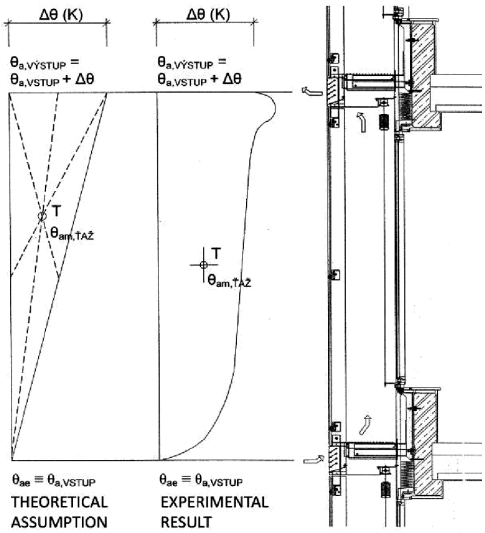

Fig. 3. Diagram showing increase of air temperature in the cavity Δθ [K] and its centroid temperature $\theta_{am,ŤAŽ}$ [°C]

Rys. 3. Wykres ilustrujący wzrost temperatury powietrza w Δθ [K] i temperaturę w części centralnej obszaru $\theta_{am,ŤAŽ}$ [°C]

4. Scientiffic polemic on the new experimental research results in the field of energy regime of natural physical cavities under windless climate situation

The new research results presented in part 3 above lead us to the most important conclusion concerning the real maximal increase of temperatures in the cavity max $\Delta\theta_{am}$ [K] which is the decisive factor for building ecology – natural ventilation from the cavity, and equally for building energy – annual energy consumption of a building with double--skin transparent facade.

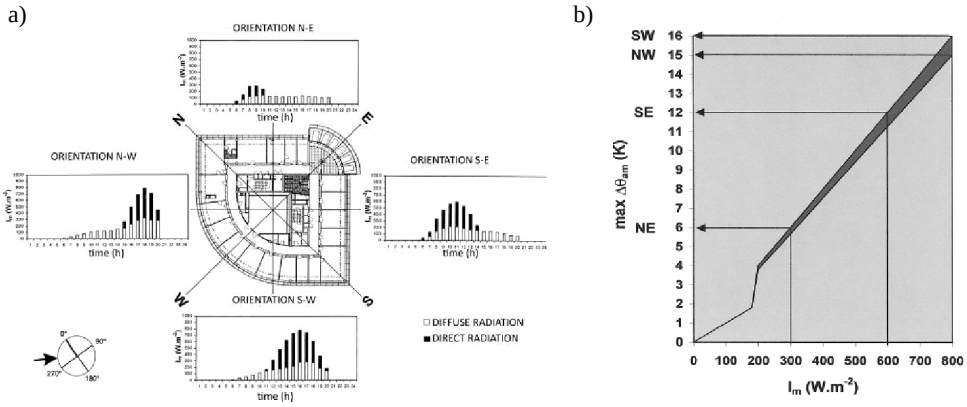

Fig. 4. a) theoretically assumed load on the cavity of the double-skin transparent facade by global solar radiation; b) theoretically acquired max increase of air temperature in the cavity as a function of the effects from global solar radiation. Climate situation – windlessness $v_{w,h} \leq 0{,}5\ \mathrm{m \cdot s^{-1}}$

Rys. 4. a) teoretycznie oszacowane obciążenie cieplne szczeliny w podwójnej fasadzie pochodzące od promieniowania słonecznego; b) teoretycznie uzyskany maksymalny wzrost temperatury powietrza w szczelinie w funkcji całkowitego promieniowania słonecznego. Warunki klimatyczne – pogoda bezwietrzna $v_{w,h} \leq 0{,}5\ \mathrm{m \cdot s^{-1}}$

Which factors condition the fact that the increase of temperatures in the natural physical cavity observed during the experiment is higher than its quantification acquired by theoretical calculations? We can summarize them in the following 3 points:

a) lower real air flow rate q_m [kg·s^{-1}], q_{ob} [m^3·s^{-1}] through the natural cavity as it was assumed in the theoretical calculations because its cross-section can be defined only by one of the two modular axes of the facade – Fig. 2,
b) lower values of load on the cavity as effected by global solar radiation (Figs. 1 and 5) as it was defined in the test reference year for the locality of Bratislava – Fig. 4,
c) possible faults in the theory that the energy flow of solar radiation falling on the opaque areas of the cavity where it transforms into long-wave thermal radiation, is absorbed by these areas while their temperature increases and subsequent transfer of heat by radiation and convection into the air of the cavity. This is replaced by assumption that the transformed solar radiation directly heats up the air flowing through the cavity. This assumption (Fig. 6), can be expressed by equation

$$\tau_g \cdot I_m \cdot dx - U_{T,\mathrm{VONK}} \cdot \theta \cdot dx - U_{m,\mathrm{VNÚT}} \cdot \theta \cdot dx = q_m \cdot c \cdot d\theta$$

where:

τ_g – coefficient of overall transmission of glazed system of front – outer transparent wall of cavity [–],

I_m – intermediate intensity of falling global solar radiation on vertical outer transparent wall [W·m^{-2}] (in evaluation time interval),

$U_{T,\mathrm{VONK}}$ – coefficient of heat transfer of outer transparent wall [W·m^{-2}·K^{-1}],

$U_{m,\mathrm{VNÚT}}$ – weighted average of heat transfer coefficients of internal constructions bounding the cavity [W·m^{-2}·K^{-1}],

q_m – mass air flow rate through cavity [kg·s^{-1}],

c – mass heat capacity of air [J·kg^{-1}·K^{-1}].

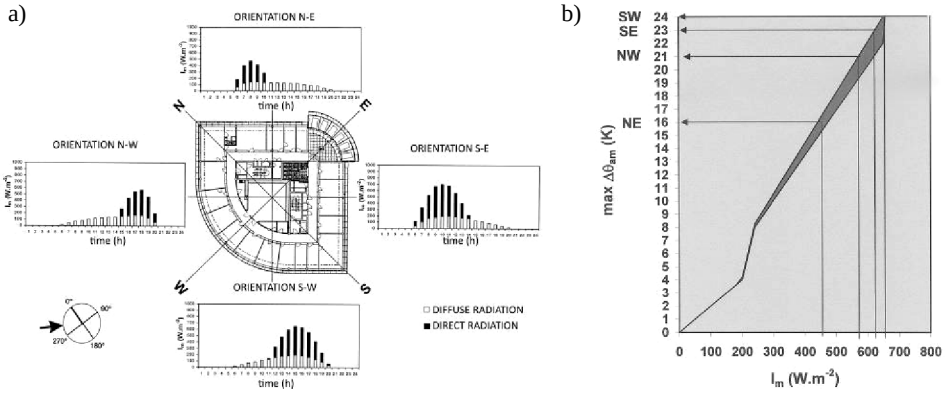

Fig. 5. a) real load on the cavity of the double-skin transparent facade by global solar radiation; b) experimentally acquired max increase of air temperature in the cavity as a function of the effects from global solar radiation. Climate situation – windlessness $v_{w,h} \leq 0{,}5$ m·s^{-1}

Rys. 5. a) rzeczywiste obciążenie cieplne szczeliny w podwójnej fasadzie pochodzące od promieniowania słonecznego; b) uzyskany eksperymentalnie maksymalny wzrost temperatury powietrza w szczelinie w funkcji całkowitego promieniowania słonecznego. Warunki klimatyczne – pogoda bezwietrzna $v_{w,h} \leq 0{,}5$ m·s^{-1}

This equation shows that the heat from transformed solar radiation, reduced by the heat transferred to the outdoor climate and the heat transferred to the core of the building, is equal to the heat transferred to the air flowing through the cavity [3]. The assumption that the resulting effect is roughly equal is not completely correct. The factors responsible for it are the materials of the surfaces in the cavity including the air distribution channels which are made of an alloy on aluminium basis with the ratio of absorption of short-wave radiation (0.45%) and emissivity–radiation of long-wave thermal radiation (0.90%) with value 0.50 and other materials like glass or glazing systems of different absorption and emission properties.

The facts listed above are also the reason why the increase of air temperature in the cavity is not linear (assumption of the theory) but deformed (result of the experiment) – Fig. 3.

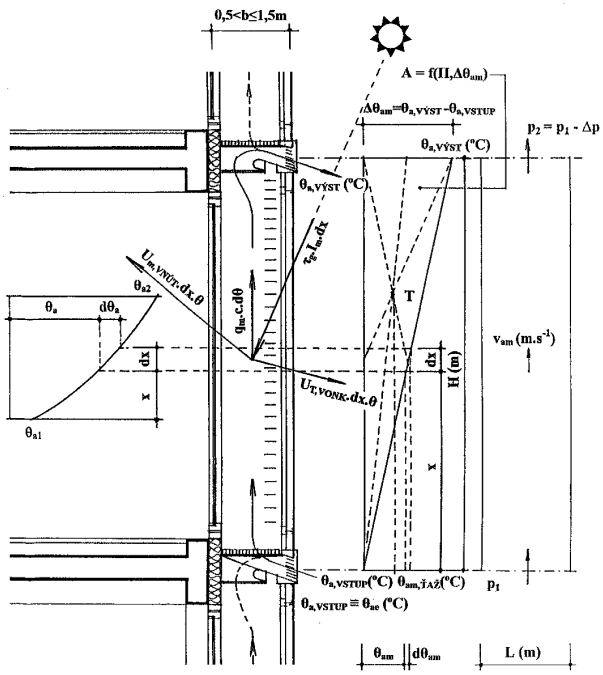

Fig. 6. Basic scheme for the equation of thermal balance in the cavity based on the assumption that the transformed solar radiation directly heats the air flowing through the cavity and the increase in the air temperature in the cavity is linear

Rys. 6. Schemat bazowy równania bilansu cieplnego w szczelinie, opartego na założeniach, że przepuszczane promieniowanie słoneczne bezpośrednio ogrzewa powietrze płynące w szczelinie, a wzrost temperatury powietrza w szczelinie jest liniowy

5. Conclusion

The new research results concerning the physical regime of a natural physical cavity under windless climate conditions acquired by an *in situ* experiment are important and useful in the following fields:

- formation and development of the theory of natural physical cavities with application of new facade technology of buildings,
- design of dynamic simulation software for calculation experiments of energy regimes of natural physical cavities,
- design of etalons for fine-tuning of existing numerical calculation software for this climate dependent problem,
- confrontation of existing models of outdoor climate in the form of test reference years of a specific locality with condition of real climate.

This work was supported by the Scientific Grant Agency of the Ministry of Education of Slovak Republic and Slovak Academy of Sciences in project VEGA 1/0316/09.

References

[1] Bielek M., Bielek B., Szabó D., *Physical cavity of double-skin façade – experiment in-situ*, [in:] *CESB 07 Prague Conference Central Europe towards Sustainable Building*, Proceedings, Volume 2, Prague: CBS Servis, s.r.o., 2007, 445-450.

[2] Bielek B., Bielek M., Kusý M., Paňák P., *Dvojité transparentné fasády budov, 2.diel*: *Vývoj, simulácia, experiment a konštrukčná tvorba fasády budovy NBS v Bratislave*, Coreal, spol. s r.o., Bratislava 2002.

[3] Bielek B., Bielek M., Palko M., *Dvojité transparentné fasády budov, 1. diel*: *História, vývoj, klasifikácia a teória konštrukčnej tvorby*, Coreal, spol. s r.o., Bratislava 2002.