BUDOWNICTWO
CZASOPISMO TECHNICZNE
TECHNICAL TRANSACTIONS
CIVIL ENGINEERING
WYDAWNICTWO POLITECHNIKI KRAKOWSKIEJ
1-B/2009
ZESZYT 5
ROK 106
ISSUE 5
YEAR 106

BORIS BIELEK, DANIEL SZABÓ, MILAN BIELEK*

NATURAL PHYSICAL CAVITY AND QUANTIFICATION OF ITS PARAMETERS BY *IN SITU* EXPERIMENT METHOD

KWANTYFIKACJA PARAMETRÓW SZCZELINY ZE SWOBODNĄ KONWEKCJĄ Z ZASTOSOWANIEM EKSPERYMENTALNEJ METODY BADAŃ POLOWYCH

A b s t r a c t

Double-skin transparent facade of the Slovak National Bank building in Bratislava. Natural physical cavity and quantification of its parameters by *in situ* experiment method. Measuring technology. Example of processing of climate-dependent results of the experiment. Documentation of partial results from the experiment from critical summer period.

Keywords: *double-skin transparent facade, natural physical cavity, experiment in situ, climate-dependent process – problem*

S t r e s z c z e n i e

Podwójna fasada transparentna budynku Słowackiego Banku Narodowego w Bratysławie. Kwantyfikacja parametrów szczeliny ze swobodną konwekcją metody doświadczalnych badań polowych. Technologia pomiarów. Przykład wykorzystania wyników eksperymentu zależnych od klimatu. Dokumentacja cząstkowych rezultatów eksperymentu podczas krytycznego okresu letniego.

Słowa kluczowe: *podwójna fasada transparentna, szczelina z konwekcją swobodną, badania polowe, procesy zależne od klimatu*

* Doc. Ing. Boris Bielek, PhD., Daniel Szabó, MSc, prof. dr h.c. Ing. Milan Bielek, DrSc., Faculty of Civil Engineering, Slovak University of Technology, Bratislava, Slovakia.

1. Introduction

The Slovak National Bank building in Bratislava was constructed in years 1997–2002. The sustainable development programme of European building industry found response in its design and implementation of ecological and energy-efficient architectural-technical solutions characteristic of intelligent buildings. The double-skin transparent facade represents closer symbiosis between the artificial-architectural environment and nature expressed by an unconventional idea of its climatic and energy concept (for example possibility of natural ventilation from a cavity of the facade etc.). In terms of design we are talking about a double-skin transparent facade with corridor type of cavity, with year-round open circuit and effective height equal to the height of one floor. The outer skin of the facade is glazed with a single safety glazing system (Fig. 1).

2. Subject, objective and methodology

The subject of this paper is the natural physical cavity (dynamics of air flow–flow rate is based on natural convection and wind effect) of a double-skin transparent facade with corridor-type cavity (width = 600 mm), with interlaced function (inlet–outlet) of air distribution channels (Fig. 1).

We aim at quantification of thermal, aerodynamic and energy regime of the natural physical cavity of a double-skin transparent facade.

The applied methodology presented in this paper is an *in situ* experiment, i.e. under real conditions of the exterior climate of a building.

3. Experiment in situ. Basic data, physical parameters, measuring technology

The experiment was carried out on the 17th floor, 56.3 m above the ground. The orientation of the experimentally examined part of the cavity was SW (240º). The duration of the experiment was 18 months (6 months test series, 12 months measurement).

We monitored the following physical parameters in the experiment (Fig. 1):

A. Temperature

θ_{ae} – air temperature of the exterior climate [ºC] (Photo 2),
θ_{ai} – air temperature of the interior climate [ºC] (Photo 2),
$\theta_1 = \theta_{a,INLET}$ – air temperature at the inlet to the facade [ºC],
$\theta_2 = \theta_{a,OUTLET}$ – air temperature at the outlet from the facade [ºC],
$\theta_3 = \theta_{am,d1}$ – air temperature in lower part of the cavity – inlet module [ºC],
$\theta_4 = \theta_{am,d2}$ – air temperature in lower part of the cavity – outlet module [ºC],
$\theta_5 = \theta_{am,s1}$ – air temperature in central part of the cavity – inlet module [ºC] (Photo 3),
$\theta_6 = \theta_{am,s2}$ – air temperature in central part of the cavity – outlet module [ºC],
$\theta_7 = \theta_{am,h1}$ – air temperature in upper part of the cavity – inlet module [ºC],
$\theta_8 = \theta_{am,h2}$ – air temperature in upper part of the cavity – outlet module [ºC],
$\theta_9 = \theta_{sim,OUT,1}$ – temperature on internal surface of the cavity – outer skin of the double--skin facade – inlet module [ºC] (Photo 4),

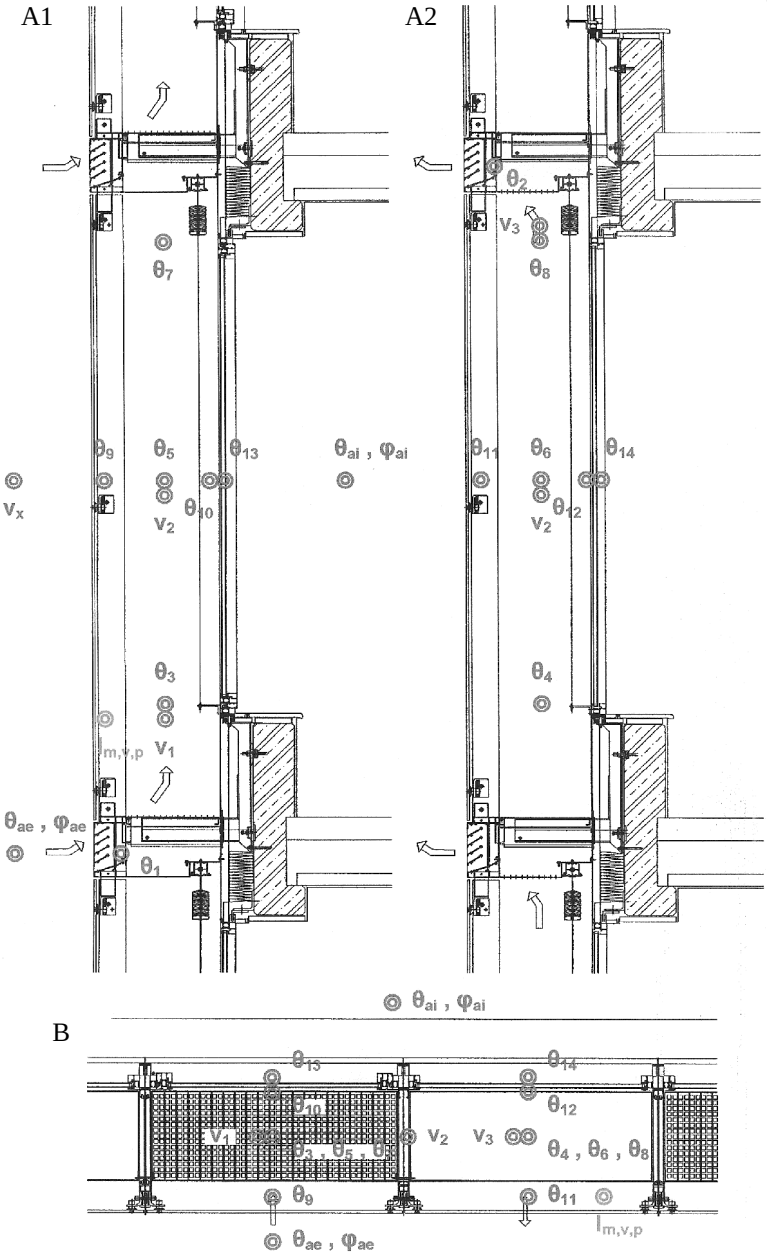

Fig. 1. Examined physical parameters of the double-skin transparent facade: A1 – vertical section – inlet module, A2 – vertical section – outlet module, B – horizontal section through inlet and outlet modules

Rys. 1. Badane parametry fizyczne podwójnej transparentnej fasady: A1 – przekrój pionowy – moduł wlotowy, A2 – przekrój pionowy – moduł wylotowy

$\theta_{10} = \theta_{sim,INT,1}$ – temperature on internal surface of the cavity – inner skin of the double-skin facade – inlet module [ºC],

$\theta_{11} = \theta_{sim,OUT,2}$ – temperature on internal surface of the cavity – outer skin of the double-skin facade – outlet module [ºC],

$\theta_{12} = \theta_{sim,INT,2}$ – temperature on internal surface of the cavity – inner skin of the double-skin facade – outlet module [ºC],

$\theta_{13} = \theta_{si,1}$ – temperature on internal surface of the double-skin facade – inlet module [ºC] (Photo 4),

$\theta_{14} = \theta_{si,2}$ – temperature on internal surface of the double-skin facade – outlet module [ºC].

B. Relative humidity

φ_{ae} – relative humidity of the external climate air [%] (Photo 2),

φ_{ai} – relative humidity of the internal climate air [%] (Photo 2).

C. Air flow

$v_1 = v_{m,d1}$ – air flow in lower part of the cavity – inlet module [$m \cdot s^{-1}$],

$v_2 = v_{m,s1\text{-}2}$ – air flow in central part of the cavity on the boundary between inlet and outlet module [$m \cdot s^{-1}$] (Photo 5),

$v_3 = v_{m,h2}$ – air flow in upper part of the cavity – outlet module [$m \cdot s^{-1}$].

D. Solar radiation

$I_{m,v,SW}$ – global solar radiation falling on vertical plane with a SW aspect [$W \cdot m^{-2}$],

$I_{m,v,p}$ – global solar radiation falling on vertical plane with a SW aspect transmitted through the outer transparent skin [$W \cdot m^{-2}$] (Photo 6).

E. Wind

$v_{w,x}$ – velocity [$m \cdot s^{-1}$] and wind direction (N, NE, E, SE, S, SW, W, NW).

Photo 1. Data acquisition switch unit
Fot. 1. System zbierania danych

Photo 2. Temperature and humidity convertor
Fot. 2. Przewodnik temperatury i wilgotności

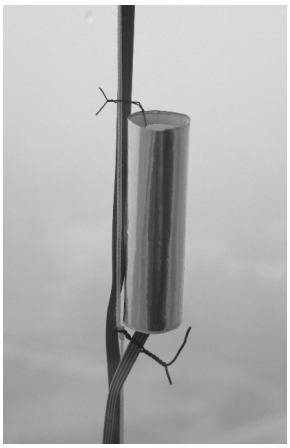

Photo 3. Sheltered probe for air temperature measurement
Fot. 3. Osłonięty czujnik pomiarowy temperatury powietrza

Photo. 4. Probes for surface temperature measurement
Fot. 4. Czujnik do pomiaru temperatury powierzchni

Photo 5. Probes for air flow velocity measurement
Fot. 5. Czujnik do pomiaru prędkości powietrza

Photo 6. Solarimeter
Fot. 6. Solarymetr

In the *in situ* experiment, the above mentioned parameters (Fig. 1) were scanned and recorded:

– air temperature: θ_1, θ_2, θ_3, θ_4, θ_5, θ_6, θ_7, θ_8, θ_{ai}, θ_{ae}: by shielded sensors Pt 100 from HAYASHI DENKO Co., Ltd., Tokyo, Japan,
– surface temperature: θ_9, θ_{10}, θ_{11}, θ_{12}, θ_{13}, θ_{14}: by sensors Pt 100 from HAYASHI DENKO Co., Ltd., Tokyo, Japan,
– relative air humidity: φ_{ae}, φ_{ai}: by converters MWPA 12-3321423 from SENZORIKA s.r.o., Prague, Czech Republic,
– velocity of air flow: v_1, v_2, v_3: by converters EE61-VC5 from E+E Elektronik, Austria,
– global solar radiation: $I_{m,v,p}$, $I_{m,h}$: by pyranometers CM11 from KIPP&ZONEN B.V., the Netherlands,
– wind – velocity and direction: v, (N, NE, E, SE, S, SW, W, NW): by automatic mobile weather station IMS AMS 111 from MicroStep – MIS, Slovak Republic.

Continuous record of scanned physical parameters was processed by data acquisition switch unit AGILENT 34970A from AGILENT TECHNOLOGIES, CA, USA.

4. Basic results of the experiment

From this extensive and long-term experimental research of physical regime of the cavity of a double-skin transparent facade, we have selected only the critical summer period (with the highest energy efficiency and typical summer weather) to be analysed in this paper (Fig. 2).

From the sequence of the measured values of the examined physical parameters we can observe:

– The interaction between air temperature of the exterior climate θ_{ae} [ºC] and thermal comfort temperature θ_{ai} [ºC] for office work in light to medium clothing corresponds

with the designed climatic and energy concept of the building (Fig. 3). For $26 \leq \theta_{ae}$ [ºC] ≤ 32 the temperature of the interior climate is in the following range: $22 \leq \theta_{ai}$ [ºC] ≤ 27.

– In the cavity of a double-skin transparent facade an air flow through the cavity occurs under any climatic load of the building throughout the whole year (also in windless weather). This fact is a basic assumption of a correct physical function of the double--skin transparent facade and indicates that its cavity is correctly aerodynamically dimensioned (total aerodynamic resistance (Fig. 2)).

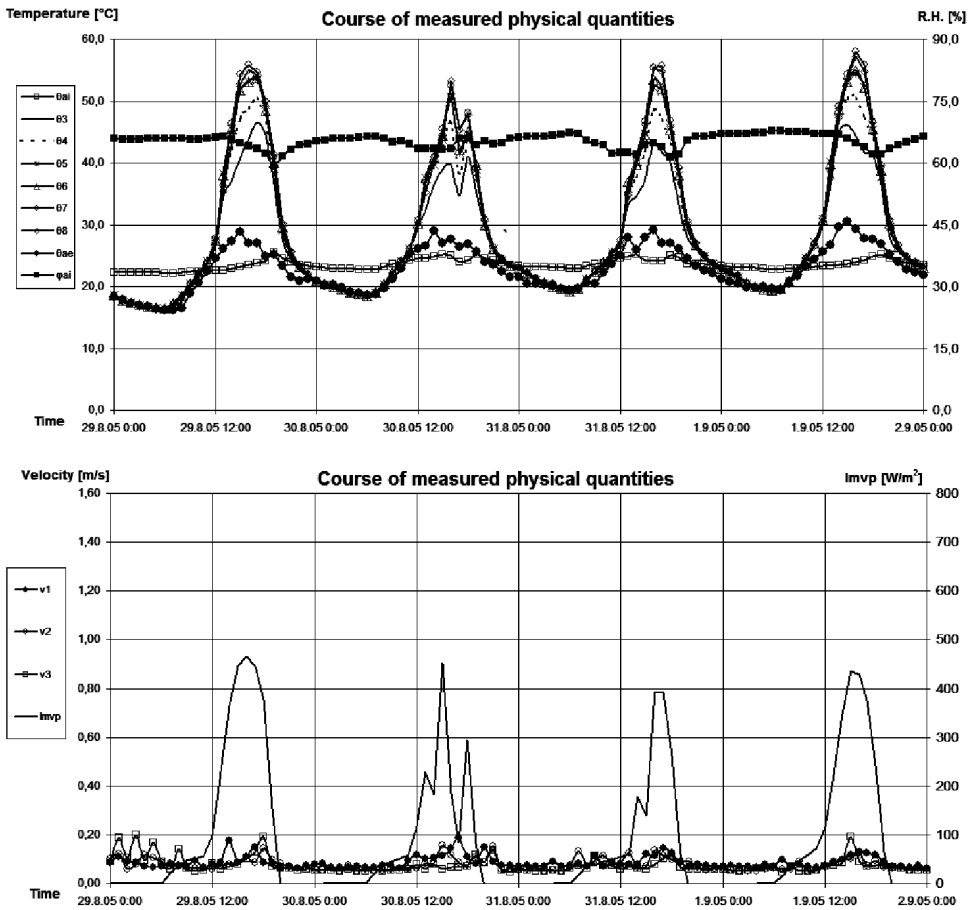

Fig. 2. Course of measured physical quantities in the period of typical summer weather
Rys. 2. Przebieg zmian mierzonych wielkości fizycznych w okresie typowej, ładnej, letniej pogody

– In windless weather ($v_w \leq 0{,}5$ m·s^{-1}) an air flow from convection is vertically rising in the natural cavity of the double-skin transparent facade. Its velocity is $0{,}1 \leq v_m$ (m·s^{-1}) $< 0{,}3$ depending on the temperature of the exterior climate θ_{ae} [ºC] and the effect of global solar radiation on the external (vertical) transparent wall of a specific aspect $I_{m,v.SW}$ [W·m^{-2}].

– When velocity of the wind is $v_w > 0{,}5$ m·s^{-1} there is an air flow from convection and wind effect in the natural cavity of the double-skin transparent facade. Its velocity is $0{,}3 \leq v_m$ [m·s^{-1}] $< 1{,}5$. Its direction depends on a distribution of highly variable aerodynamic coefficient of external pressure C_{pe} [–] on the building.

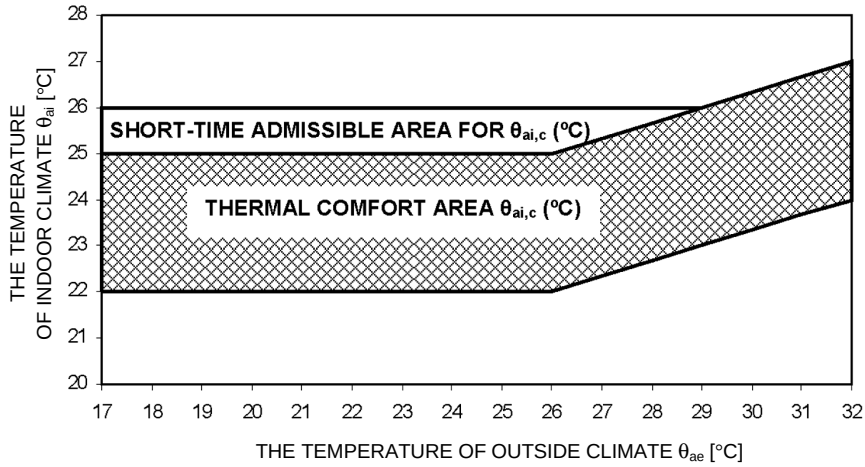

Fig. 3. The area of the thermal comfort in relation to the temperature of the outside air (DIN 1946, Part 2)
Rys. 3. Obszar komfortu cieplnego w zależności od temperatury powietrza zewnętrznego (DIN 1946, Part 2)

5. Conclusions

The extensive long-term experiment offers an abundance of new research results concerning thermal, aerodynamic and energy regime of natural physical cavities of double--skin transparent facades.

This experimental research represents equally irreplaceable standard for fine-tuning of dynamic simulation software for numerical calculation experiments of this climate--dependent problem.

This work was supported by the Slovak Research and Development Agency under the contract No. APVV-20-044405 and by the Scientific Grant Agency of the Ministry of Education of Slovak Republic and Slovak Academy of Sciences in project VEGA 1/3319/06.

References

[1] Bielek B., Bielek M., Kusý M., Paňák P., *Dvojité transparentné fasády budov. 2.diel*: *Vývoj, simulácia, experiment a konštrukčná tvorba fasády budovy NBS v Bratislave*, Coreal, spol. s r.o., Bratislava 2002.

[2] Bielek M., Bielek B., Szabó D., *Fyzikálny režim medzipriestoru dvojitej transparentnej fasády budovy NBS v Bratislave – experiment in-situ*, STU – Stavebná fakulta, Bratislava 2005.