CZASOPISMO TECHNICZNE M
WYDAWNICTWO POLITECHNIKI KRAKOWSKIEJ

z. 3-M/2008
ISSN 0011-4561
ISSN 1897-6328

TADEUSZ CZYŻEWSKI*

ANALYSIS OF AIR FLOW INTO CARBURETTOR THROAT OF MOTOR-BICYCLE ENGINE

ANALIZA PRZEPŁYWU POWIETRZA PRZEZ GAŹNIK MOTOROWERU

A b s t r a c t

The paper is a result of work done during the analysis of air flow through motor-bicycle carburettor. The object of analysis was a carburettor developed by Bing International L.L.C. which is widely employed in motor-bicycle industry. A prototype version on which the investigation was done was additionally equipped with an electromagnet usd for for precision regulation of fuel metering needle. The research focused on the non-return valve, which is placed on the air inlet into the carburettor. The influence of valve closing element position on flow disturbance was specified. The pressure and velocity distribution of air, which flows through this valve, was also determined.

Keywords: *CFG analysis, carburettor, flow distribution*

S t r e s z c z e n i e

Prezentowany artykuł jest efektem prac wykonanych podczas analizy przepływu powietrza przez gaźnik motoroweru. Obiektem analiz był gaźnik firmy Bing International L.L.C., którego starsze wersje są szeroko stosowane w przemyśle motorowerowym i motocyklowym. Prototypowa wersja, na której zostały przeprowadzone badania, wyposażona była dodatkowo w elektromagnes, służący do precyzyjnej regulacji położenia iglicy dozującej paliwo. W artykule skupiono się na przebadaniu zaworu zwrotnego, znajdującego się na wlocie powietrza do gaźnika. W związku z tym określono wpływ położenia elementu zamykającego zawór na zaburzenia przepływu. Wyznaczono także rozkład ciśnień i prędkości powietrza przepływającego przez ten zawór.

Słowa kluczowe: *analiza MES, gaźnik, analiza przepływów*

* Tadeusz Czyżewski, MSc, supervisor: Edward Lisowski, PhD, DSc, prof. of CUT, Institute of Applied Informatics, Cracow University of Technology.

1. Introduction

Carburettors have been commonly used in passenger car engines since the end of the 1980s. Along with the development of car electronics, carburettor constructions have almost completely been replaced by electronic injection systems. Despite that, carburettors are still used, for economic reasons in, for example, combustion chain saws, motor-bicycles, combustion mowers, motorboats. However, these carburettors have to meet very strict requirements concerning the quality of air-fuel mixture control. Creation of air-fuel mixture is a very complex problem. An important role in mixture creation is played by pressure and velocity distribution of air which flows through the carburettor. The flow of air in flow canals is described by Navier-Stokes equations. Due to the difficulties in analytical solution of these equations, numerical methods are used, especially computational fluid dynamics methods (CFD). The paper presents numerical simulation of air flow through the non-return valve. The purpose of the simulation was to determine the influence of non-return valve closing element position on air flow.

2. Carburettor model

The objective of the present research was a modification of carburettor design used by Bing International L.L.C. for motor-bicycle engines supply. In this construction two non-return valves controlled by pressure in carburettor throat were applied. The task for these valves is to regulate air-fuel mixture flow. Fig. 1 shows a carburettor model made in CAD system. It was used for making flow canals discreet models essential to carry out an experiment of air flow through the valve. The fundamental elements of tested carburettor are: float chamber (1), throttling valve control by accelerate rod (2), air valve (suction) (3), electro-magnetic system of fuel needle control (4) and carburettor throat (5).

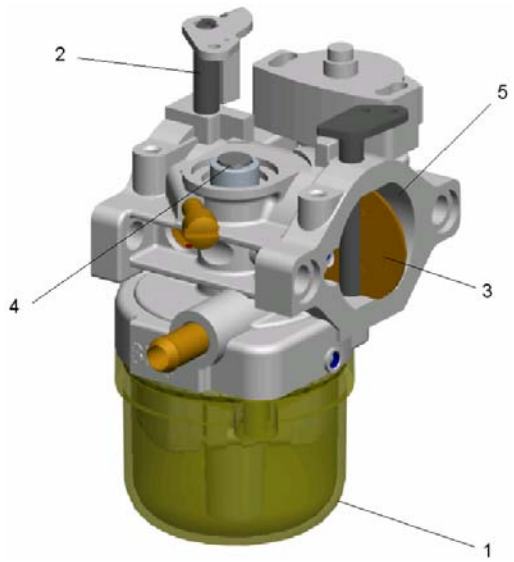

Fig. 1. BING carburettor model, 1– float chamber, 2 – throttling valve control by accelerate rod, 3 – air valve (suction), 4 – electro-magnetic system of fuel needle control, 5 – throat

Rys. 1. Model gaźnika firmy BING, 1 – komora pływakowa, 2 – przepustnica obrotowa sterowana cięgnem gazu, 3 – przepustnica powietrza (ssania), 4 – elektromagnetyczny system sterowania iglicą, 5 – gardziel

The carburettor has two supply systems, i.e. idle running system where the first valve is placed (8) and the main running system where the second valve, which was the object of research, is placed. The valves positions in the carburettor are presented in Fig. 2.

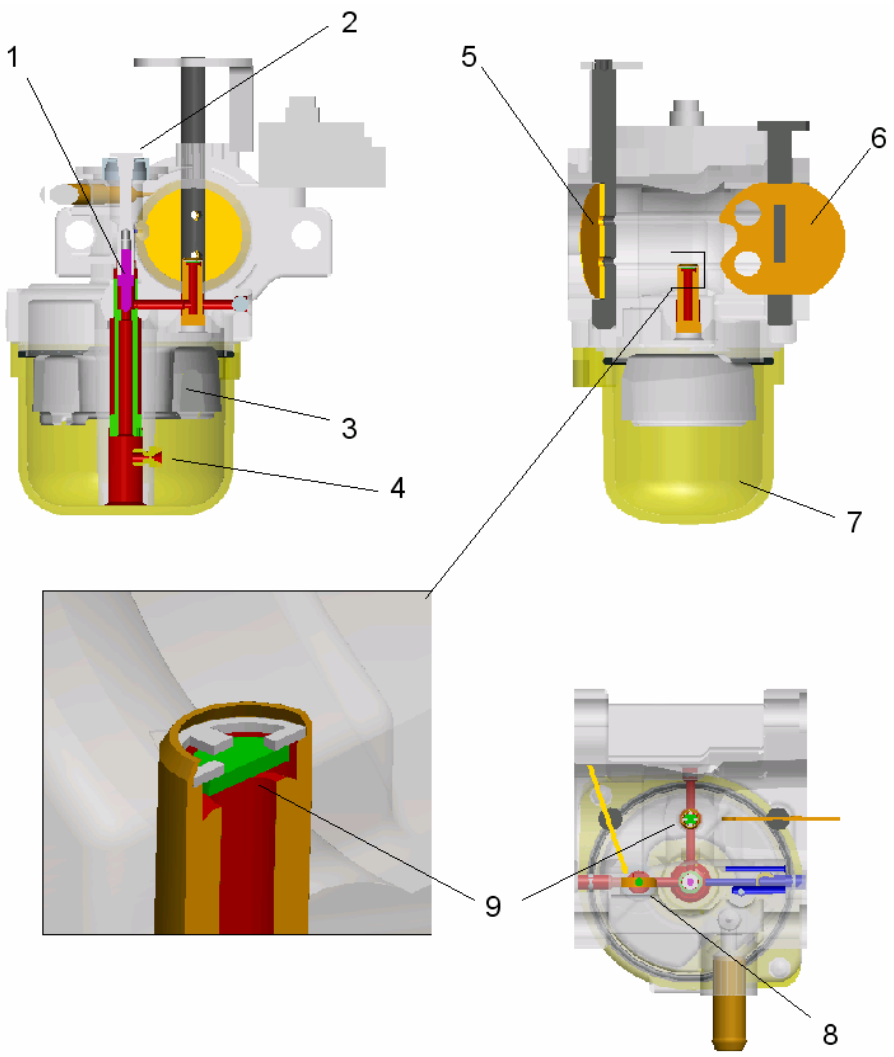

Fig. 2. Carburettor design, 1 – needle, 2 – electromagnet for needle controlling, 3 – float, 4 – fuel main jet, 5 – throttling valve control by accelerate rod, 6 – air valve (suction), 7 – float chamber, 8 – non-return valve placed in idle running system, 9 – tested valve

Rys. 2. Budowa gaźnika, 1 – iglica, 2 – elektromagnes sterujący położeniem iglicy, 3 – pływak, 4 – główna dysza paliwa, 5 – obrotowa przepustnica sterowana cięgnem gazu, 6 – przepustnica powietrza (ssania), 7 – komora pływakowa, 8 – zawór zwrotny znajdujący się w układzie biegu jałowego, 9 – badany zawór zwrotny

2.1. Scope of CFD analysis

The purpose of the CFD analysis was to determine the influence of non-return valve closing element position on air flow. The position of closing element could affect driver's manoeuvres such as turning, violent braking, etc. It causes disturbance of air flow and air-fuel mixture quality deterioration.

Taking in consideration most frequent cases of closing element position change an experiment for the following variants was carried out:

– axis of valve closing element is on the canal axis,
– axis of valve closing element is moved relative to canal axis,
– axis of valve closing element is sloping toward canal axis.

Fig. 3 is a graphic presentation of the analysed variants.

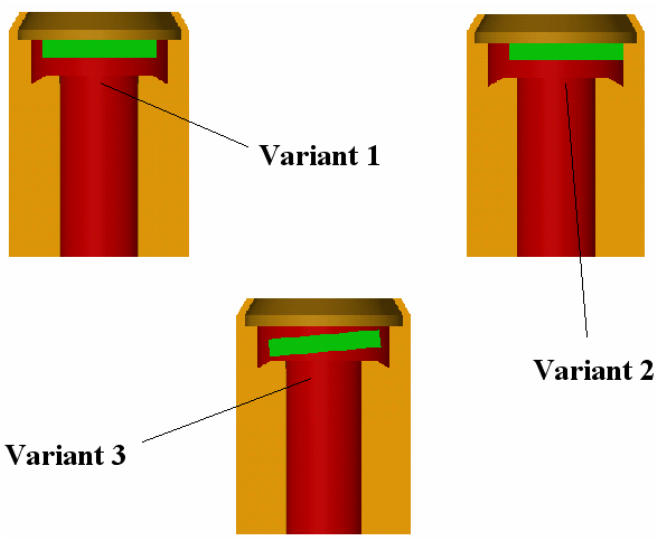

Fig. 3. Variants of analysis

Rys. 3. Warianty przeprowadzonych badań

3. Geometrical models of particular analysis variants

To carry out a CFD analysis it is necessary to build discreet models that are directly used in numerical calculations. Discreet models are based on geometry defined in CAD models. Building of CAD models for particular variants started from making a carburettor flow path geometrical model. Next a discreet model was made and a CFD analysis carried out in order to determine pressure distribution in thewhole carburettor. Based on pressure distribution geometry for particular calculation variants was defined. Fig. 4 shows CAD models for particular variants.

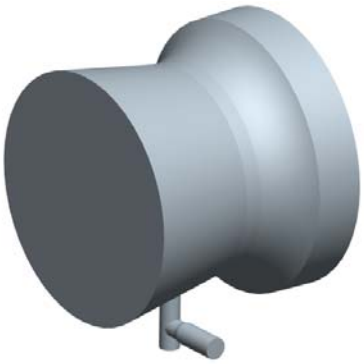

Three dimensional CAD model

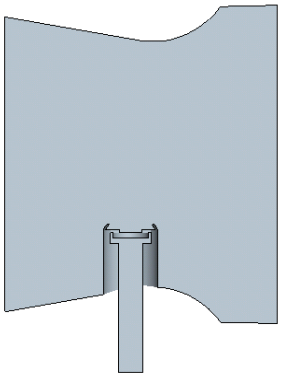

CAD model intersection for variant 1

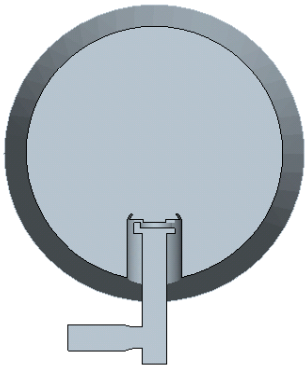

CAD model intersection for variant 2

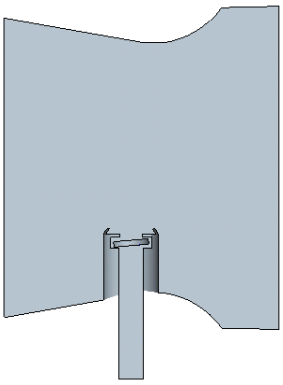

CAD model intersection for variant 3

Fig. 4. CAD models for particular calculation variants

Rys. 4. Modele dla poszczególnych wariantów obliczeń

4. Discrete models for particular calculation variants

CAD models geometry was used to build meshes of discrete models used directly in calculations. Meshes (also CAD models) were made in *ProEngineer* environment. Due to complex CAD models geometry near the non-return valve, it was decided to generate meshes made from tetrahedral cells. For this purpose a module of *ProEngineer* system called *ProMechanica* was used. In places where flow path cross-sectional area changed, the mesh was concentrated to increase calculation accuracy. In Figs 5a, 5b, 5c meshes for particular analysis variants have been presented.

CAD analysis was performed in *AnSYS CFX* with the following assumptions: the examined flow is turbulent, there is no heat exchange between air and environment. Using *CFX-Pre* preprocessor defined: air parameters, boundary conditions, flow parameters and

turbulence model. Next the preprocessor data and meshes were exported to *CFX-Solver* where calculation was done.

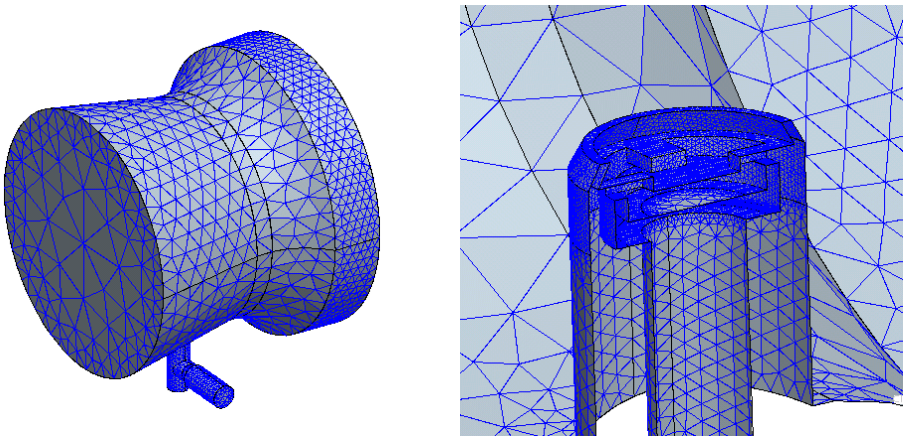

Fig. 5a. Variant 1 mesh, on the left mesh general profile, on the right mesh concentration near the non-return valve

Rys. 5a. Siatka dla wariantu 1, po lewej ogólny zarys siatki, po prawej zagęszczenie siatki w okolicach zaworu zwrotnego

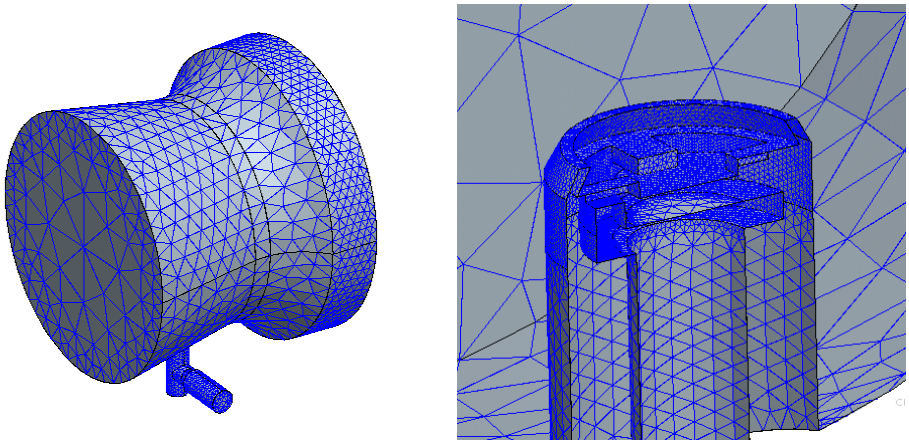

Fig. 5b. Variant 2 mesh, on the left mesh general profile, on the right mesh concentration near the non-return valve

Rys. 5b. Siatka dla wariantu 2, po lewej ogólny zarys siatki, po prawej zagęszczenie siatki w okolicach zaworu zwrotnego

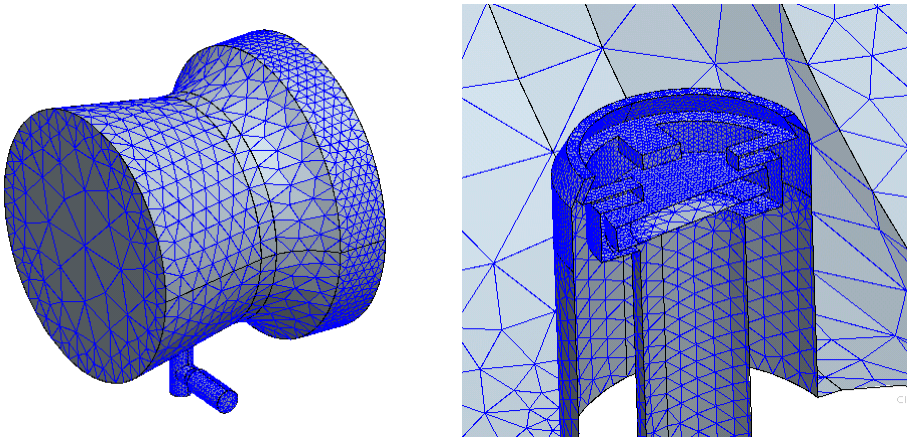

Fig. 5c. Variant 3 mesh, on the left mesh general profile, on the right mesh concentration near the non-return valve

Rys. 5c. Siatka dla wariantu 3, po lewej ogólny zarys siatki, po prawej zagęszczenie siatki w okolicach zaworu zwrotnego

5. Analysis of calculation results

After calculations by the solver the results were imported into *CFX-Post* postprocessor and worked out in a graphic form. These graphic results are presented in Figs 6–8. Fig. 6a shows pressure distribution in non-return valve intersection for variant 1. On the valve inlet the air pressure equals –158,21 Pa. In the area between the valve wall and closing element wall there is a violent increase of pressure caused by the cross-sectional area change. That is why the pressure on the valve outlet reaches value of – 4,13 Pa.

In Fig. 6b the velocity distribution of air in non-return valve intersection for variant 1 was presented. The value of air velocity on the inlet equals 10,21 m/s. Next, inside the valve, where the cross-sectional area changed, it decreased to 8,43 m/s, which gives the volumetric flow rate equal $6{,}79 \cdot 10^{-5}$ m^3/s. The velocity of air is decreasing to zero.

Fig. 7a presents pressure distribution in non-return valve intersection for the second variant. Pressure values on the carburettor inlet and outlet are higher than the first variant. They equal –170,53 Pa (inlet) and –5,26 Pa (outlet). These differences are caused generally by a cross-sectional area geometry change produced by valve closing element move. The values of velocity and volumetric flow rate also changed (Fig. 7b). Inside the non-return valve the volumetric flow rate equals $7{,}97 \cdot 10^{-5}$ m^3/s, and in the inlet canal $3{,}41 \cdot 10^{-5}$ m^3/s.

In Fig. 8a pressure distribution of air in non-return valve intersection for the third variant was shown. The values of pressure on the carburettor inlet and outlet are different than the values in the first variant. They equal, respectively, –175,32 Pa (inlet) and –5,01 Pa (outlet). These differences are caused by cross-sectional area geometry change produced by valve closing element rotation. This change also caused a decrease of air velocity inside the valve to 8,28 m/s and volumetric flow rate to $6{,}67 \cdot 10^{-5}$ m^3/s. The volumetric flow rate on the valve inlet due to velocity increase in this area, the value increased to $3{,}8 \cdot 10^{-5}$ m^3/s. The velocity distribution in non-return valve intersection for the third variant is presented in Fig 8b.

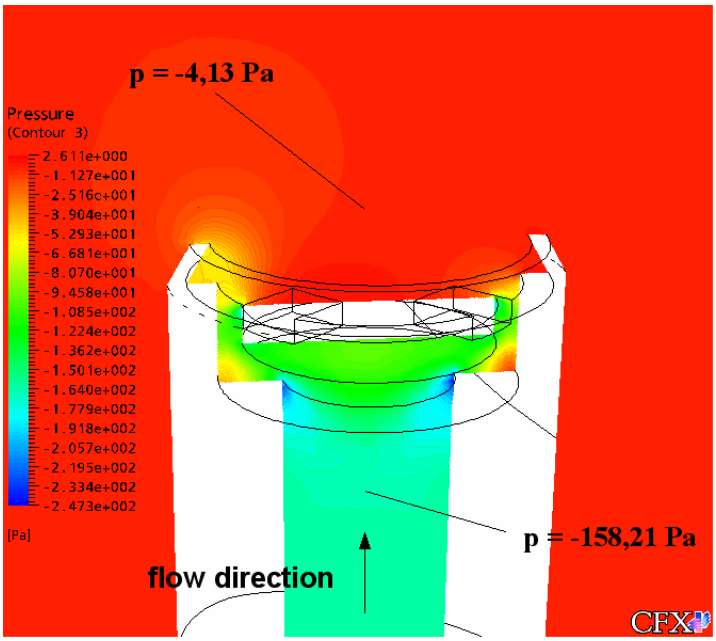

Fig. 6a. Pressure distribution, variant 1

Rys. 6a. Rozkład ciśnień, wariant 1

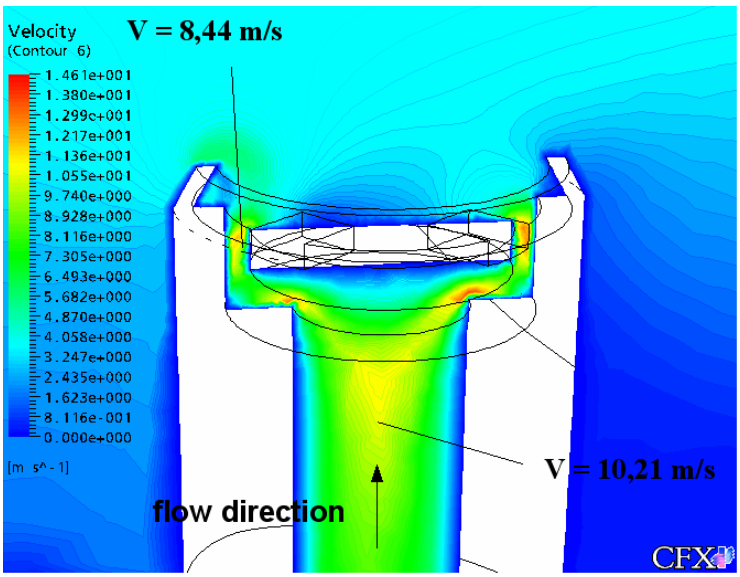

Fig. 6b. Velocity distribution, variant 1

Rys. 6b. Rozkład prędkości, wariant 1

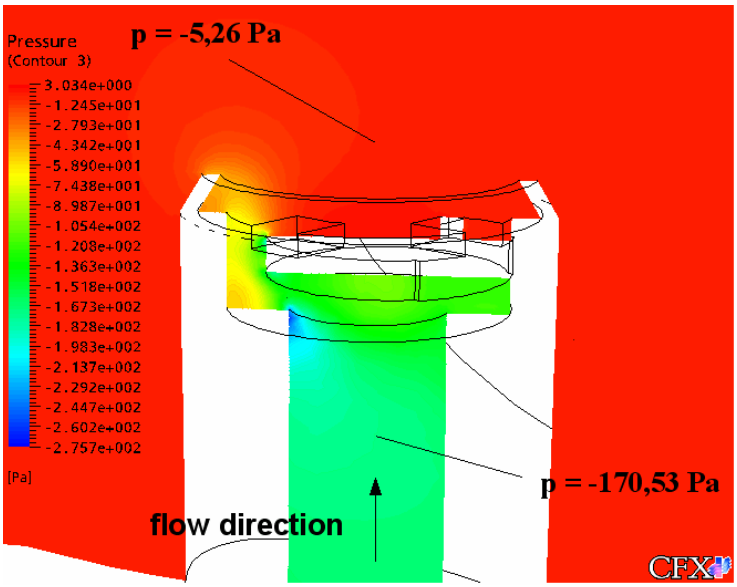

Fig. 7a. Pressure distribution, variant 2

Rys. 7a. Rozkład ciśnień, wariant 2

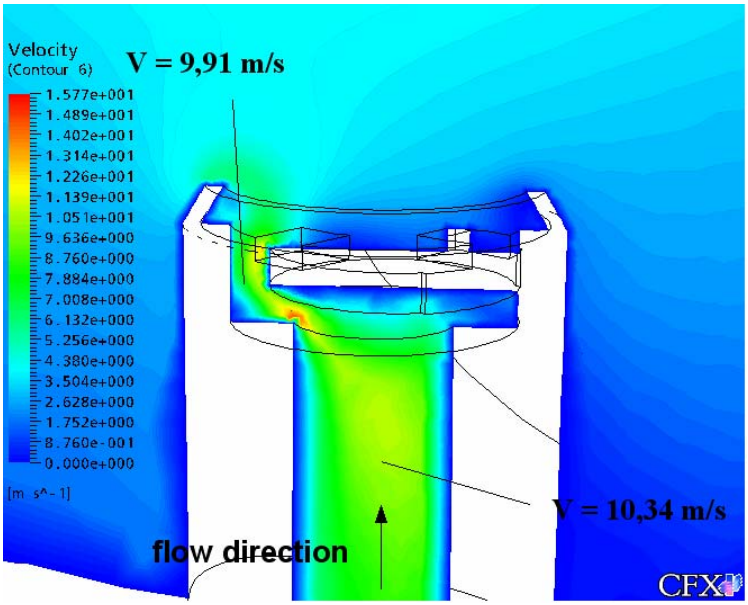

Fig. 7b. Velocity distribution, variant 2

Rys. 7b. Rozkład prędkości, wariant 2

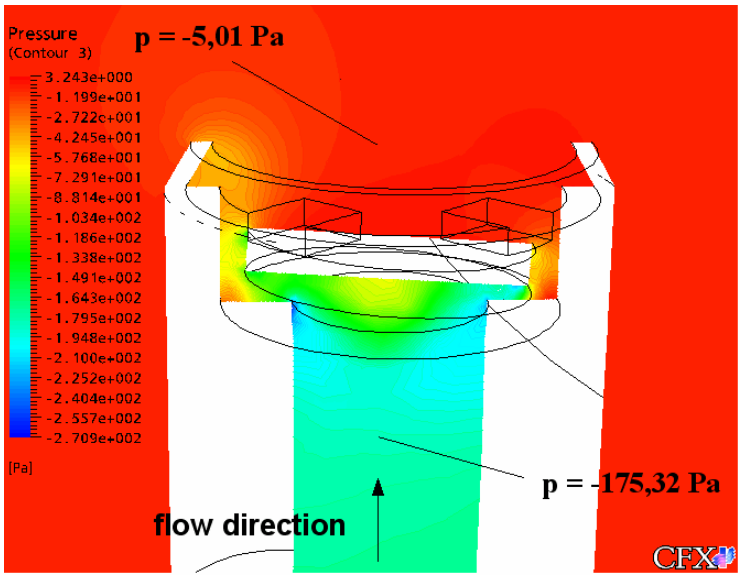

Fig. 8a. Pressure distribution, variant 3

Rys. 8a. Rozkład ciśnień, wariant 3

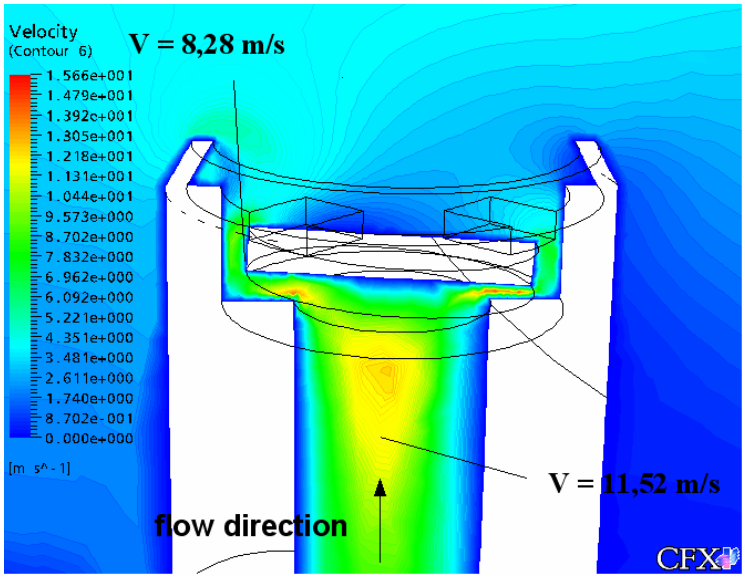

Fig. 8b. Velocity distribution, variant 3

Rys. 8b. Rozkład prędkości, wariant 3

6. Summary and conclusions

As a result of the research the influence of non-return vale closing element position on air flow character was determined. There was obtained information about liquid mass flow: velocity field distribution, pressure field. Using parametrical CAD models for mesh building made it possible to easily changing the discrete models. From the analysis it follows that the valve closing element position change influence: volumetric flow rate change in outlet canal, air pressure change in front of and behind the valve. Along with the cross-section area increase the air velocity in the outlet canal and pressure values at both side of valve also increases.

This project was made in cooperation with Sachs Engineering GMBH. CFD analysis was performed in AnSYS CFX 5.7.1 at Academic Computer Centre CYFRONET AGH.

References

[1] D m o w s k i R., *Gaźniki motocyklowe*, WKiŁ, Warszawa 2004.
[2] AnSYS CFX Ltd., *Help*, 2004.