CZASOPISMO TECHNICZNE M
WYDAWNICTWO POLITECHNIKI KRAKOWSKIEJ

z. 3-M/2008
ISSN 0011-4561
ISSN 1897-6328

PAWEŁ KOT*

COMPUTER AIDED DESIGN OF PLASTIC COMPONENTS USED IN AUTOMOBILE INDUSTRY

KOMPUTEROWE WSPOMAGANIE PROJEKTOWANIA ELEMENTÓW Z TWORZYW SZTUCZNYCH STOSOWANYCH W PRZEMYŚLE MOTORYZACYJNYM

A b s t r a c t

The work focuses on the task of designing and examining a cable channel for a personal car of a new generation, which will enter the manufacturing process in the near future. The main characteristic of this particular solution is the modularity of the electrical installation, simplified access and diagnostics as well as adaptation to application at automatic manufacturing stations. Practical application of this advanced software and completion of various types of tests and initial simulations are discussed. Application of the mould injection process simulation as well as utilization of the Computer Aided Production increase the manufacturing precision, which in turn decreases the time necessary to introduce a new component to production.

Keywords: *design*, *polymeric components*, *analysis*, *moulding*, *injection*

S t r e s z c z e n i e

W niniejszym artykule podjęto się zadania zaprojektowania i zbadania kanału kablowego do samochodu osobowego nowej generacji, który będzie wdrożony do produkcji w przyszłości. Cechą tego rozwiązania będzie modułowość instalacji elektrycznej z łatwym dostępem i diagnostyką oraz przystosowanie do pracy w zrobotyzowanych stanowiskach. W artykule omówiono zastosowanie zaawansowanego oprogramowania oraz przeprowadzono różnorakie testy i symulacje wstępne. Stosowanie symulacji wtrysku, a także wykorzystywanie Komputerowego Wspomagania Wytwarzania pozwoliły na zwiększenie dokładności wykonania, jak i przyspieszyło proces wprowadzania nowego detalu do produkcji.

Słowa kluczowe: *projektowanie*, *tworzywa sztuczne*, *analiza*, *wtrysk tworzyw sztucznych*

*Paweł Kot, V year student, Institute of Applied Informatics, Cracow University of Technology.

1. Introduction

New manufacturing technologies as well as brand new plastic materials with various properties meeting different, strict mechanical requirements mean that metal components are replaced by plastic ones with increasing frequency. The automobile industry is one specific example of a situation where the production process of new cars relies heavily on the application of plastic components. Initially, plastic components were applied for auxiliary purposes e.g. covers, stoppers etc. Satisfactory results caused however increasingly widespread adoption of plastic materials for various purposes, currently including mechanically, hydraulically or even thermally loaded elements of a car engine. Application of plastic materials requires appropriate design, manufacturing and examination of the target components in a completely new way when compared with standard, metal elements. Computer software packages, designed specifically for such applications, are especially useful in such cases. In the research, the Unigraphics software package was used which is characterized by a very specific and highly integrated data organization as well as internal structure, based on creation of application modules inside a single system based Gateway environment, taking advantage of the mathematical modelling module named Parasolid. This particular system contains a novel module named Solid Modelling, providing the users with the ability to use both classical solids, surfaces and frame models as well as parametrized models of typical geometric forms, integrated in the environment of this modern software package.

The present work focuses therefore on the task of designing and examining a cable channel for a personal car of a new generation which will enter the manufacturing process in the near future. The main characteristic of this particular solution is the modularity of the electrical installation, simplified access and diagnostics as well as adaptation to application at automatic manufacturing stations.

2. 3D Model

The contemporary automobile industry utilizes a design process for plastic components, which is depicted in Fig. 1, revealing that once the manufacturing concept design is completed, the initial production stage for practical manufacturing of any elements is inherently the construction of 3D models. A similar approach was taken when designing the electrical channels for the new personal car. The said channels are to be manufactured from plastic and they ought to be subject to general car requirements. Due to the requirements of the car construction, the aforementioned channels are guided mainly in the locations of difficult access, implying their complex geometric shape.

The paper is limited to presenting the analysis of one of the most vital elements of the electric bundle of the vehicle, which is located in the proximity of the fuel pump. Fig. 2 presents the Unigraphics software package 3D model of the said element along with all surrounding collaborating components. It can be thus seen in Fig. 2 that the modelled channel is connected with the main electrical channel and supports it as well as guides the electrical cables to the other side of the engine.

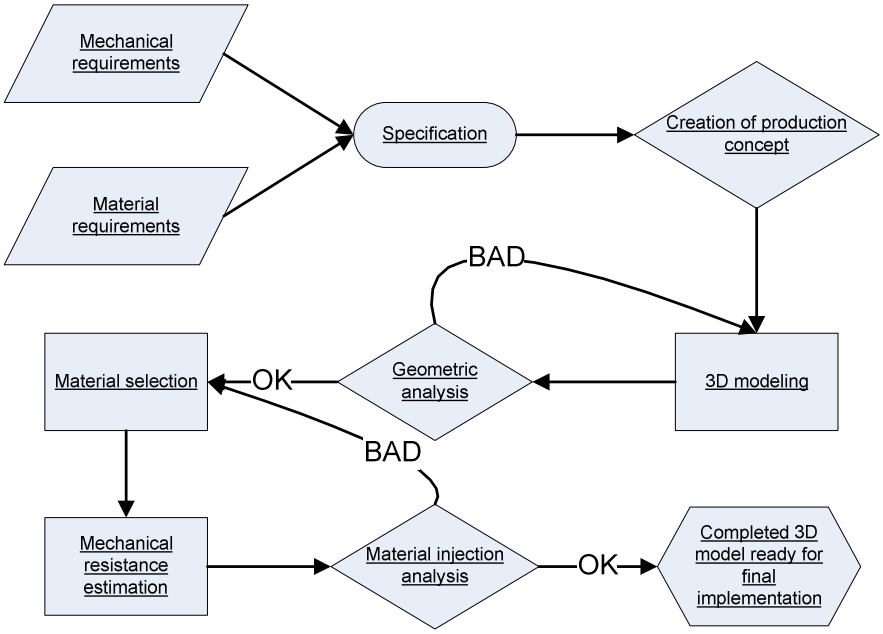

Fig. 1. A flow chart for the plastic component design process
Rys. 1. Schemat blokowy procesu projektowania elementów z tworzyw sztucznych

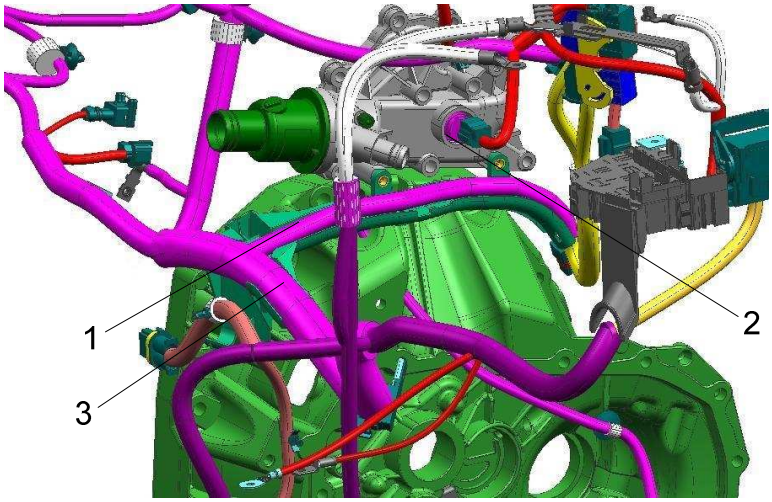

Fig. 2. 3D model of the electrical installation in the engine chamber area: 1 – examined lateral channel, 2 – fuel pump, 3 – the main electrical bundle
Rys. 2. Model 3D instalacji elektrycznej w obszarze komory silnika: 1 – badany kanał poprzeczny, 2 – pompa paliwa, 3 – główna wiązka elektryczna

3. Model analysis in terms of its manufacturing feasibility

In general, each new plastic element needs to go through the process of selection of an appropriate material, correcting its geometry depending on the applied material and its processing etc. Thus the practical implementation to manufacturing for such a new plastic element is more complex when compared with metal components, where the technical process created once can be reused for a wide range of subassemblies.

3.1. Analysis of geometric requirements

Taking into account the fact that the given element will be manufactured from plastic, its design process must be subject to very specific requirements. In the case of the appliation of the Unigraphics software package, it is possible to take advantage of the inbuilt expert tools. The most vital ones include:

Tiny – is function searches for all tiny bodies, faces, edges or curves in curves, edges and bodies for which the diagonal length of a box enclosing the object is less than the specified distance tolerance.
Misaligned – this function checks all the selected geometry that is close to being orthogonal with respect to the WCS, but is not exactly aligned with it.
Data Structures – this function checks each selected body for data structure problems, such as corruption.
Face-Face Intersections – this function checks each selected body for face-to-face intersections, and that all faces of the selected body meet each other at their edges and nowhere else.
Sheet Boundaries – this function searches for all of the boundaries (or gaps) in the selected bodies.
Smoothness – for faces whose surfaces are b-surfaces, smoothness checks the b-surfaces to make sure the surfaces are smooth along their patch boundaries.
Self-intersection – this function performs a check for faces that self-intersect.
Spikes/Cuts – this function searches the selected faces for possible spikes or cuts. It does this by checking the angle between adjoining edges. When the angle is very small, the system checks several points along the shorter edge; if the distance between all those points and the longer edge is less than the specified Distance Tolerance, that face is determined to have a possible spike or cut.
Smoothness – this function searches for all edges whose adjoining faces do not join smoothly.
Tolerances – this function checks the tolerance of all the selected edges against the value specified in the Distance tolerance field.

3.2. Geometry verification in terms of moulding direction

In order to assure that the newly created cable channel is properly manufactured using the injection moulding process, it is necessary to assure appropriate inclination for all walls, which will in turn allow correct removal of the moulded piece. Appropriate analysis in the Unigraphics system is activated via *Analysis* menu, by selecting *Face* and then *Slope* options.

The system will require the definition of the basic parameters such as: mould opening direction, graphic representation for the output data and wall inclination angle range for which the following analysis process will be effected. In the examined case, the selected wall inclination angle ranges between –0,5 and +0,5. Next, the designed profile will be subject to the process of detecting trapped areas – it is one of the most vital tests conducted during the geometry verification phase. Once the appropriate analysis is complete, the designer knows whether it is necessary to employ special mould elements, namely latches, inlets, etc. It can be thus seen in Fig. 3, that in the case of the examined model it is possible to observe a material relief effect, precluding moulded piece from leaving the mould once the manufacturing phase is complete. This particular error can be corrected using the aforementioned Solid Modelling module.

The system automatically informs the user which walls are parallel to the moulding direction, which walls require positive/negative inclination adjustment or which ones are within the tolerance limits. The Unigraphics package, using specific colouring scheme for individual wall types, indicates the element walls which are almost parallel to the moulding direction but their surface is relatively small when compared with the surface of the whole examined channel.

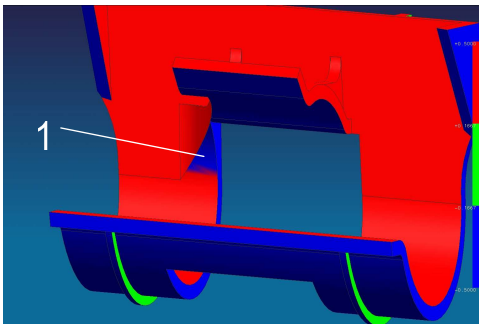

Fig. 3. Cable mounting facet with a visible trapper area 1
Rys. 3. Szczegół mocujący przewód z widocznym uwięzionym obszarem 1

In the examined case, such a defect could be discarded but for educational purposes the said imperfect inclination angles will be corrected using the *Traper* function, the result of which is depicted in Fig. 4. In the case of such a final moulded element profile, it is almost certain that there will be no problems removing the moulded piece from the mould.

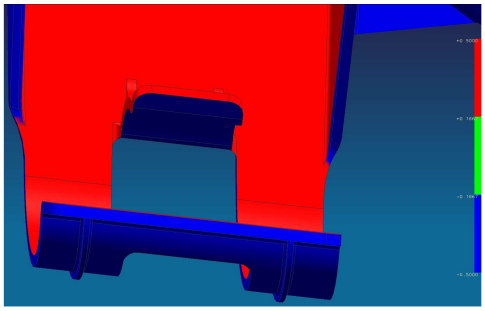

Fig. 4. Correctly modelled fragment of the cable channel
Rys. 4. Poprawnie zamodelowany fragment kanału kablowego

3.3. Analysis of the plastic material injection process

During the creation of brand new elements, increasing attention is paid to limiting the errors occurring during the final design stages, which incur typically tremendous cost. One of the areas where such an aforementioned effect is most visible is the tool shop, developing tools used for analysis of the designed components. Such a particular situation stems from a very simple fact – the cost of a single mould reaches most often several to several dozen thousand Euro. It is visible thus that a simple design stage error for such a component can sometimes result in the bankruptcy of a company, therefore the Unigraphics software is equipped with an integrated solution of MoldFLOW company, dubbed Plastic Advisor, which delivers detailed information on the plastic injection process. It allows the proper selection of the plastic material, defining injection points and simulating the plastic material injection into the mould. The designer has thus the ability to analyze temperature, pressure, material concentration and other parameters vital for the production process.

Such complex analyses are all based on the knowledge of the following relations: viscosity – shear rate, which is the basic parameter for any technological calculations involving plastic materials. The aforementioned relation is an individual feature of each particular plastic material. Another equally vital formulation is the van der Walls equation describing the correlation between pressure, specific volume and material injection temperature (p – V – T). This particular formula has the following form

$$\left(\mathrm{p}+\frac{a}{\mu^2}\right)(\mu-b)=K\mathrm{T} \tag{1}$$

where:

- p – external pressure [Pa],
- μ – specific volume [m^3/kg],
- T – absolute scale temperature [K],
- *a* – material correction coefficient,
- *b* – material volume correction coefficient,
- *K* – material constant.

The proper application of this particular formula allows controlling the moulding piece contraction processes. An example of the p – V – T relation is depicted in Fig. 5.

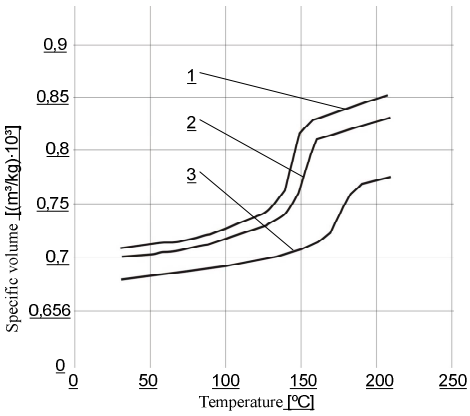

Fig. 5. p – V – T (pressure – specific volume – temperature) for Hostaform C plastic material: 1 – 0,1 MPa, 2 – 40 MPa, 3 – 200 MPa

Rys. 5. Zależność p – V – T (ciśnienie – objętość właściwa – temperatura) dla tworzywa Hostaform C: 1 – 0,1 MPa, 2 – 40 MPa, 3 – 200 MPa

The polymer flow characteristics is another vital property modelled by the Moldflow software package. Experimental estimation of this particular characteristics is extremely expensive and requires very costly and unique measurement tools, thus all the software packages simulating polymeric flow processes are based on mathematical models. The vast majority of polymers feature non-Newtonian fluid properties, thus being characterized by the variable viscosity η, which in turn is strongly dependent on flow velocity, as depicted in Fig. 6.

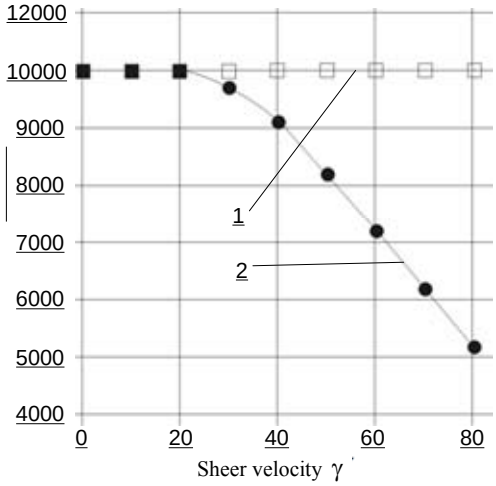

Fig. 6. Relation between viscosity and shear velocity: 1 – linear curve representing the behaviour of the so-called Newtonian fluids, where tgα = η = const; 2 – non-linear curve representing the behaviour of the so-called non--Newtonian fluids, where tgα = η ≠ const

Rys. 6. Zależność lepkości od szybkości ścinania: 1 – jest funkcją prostoliniową i reprezentuje zachowanie tzw. cieczy newtonowskiej (*newtonian fuids*) – tgα = η = const; 2 – jest funkcją krzywoliniową i reprezentuje zachowanie tzw. cieczy nienewtonowskich (*non-newtonian fluids*) – tgα = η ≠ const

One of the most popular formulae describing the flow of non-Newtonian fluids is the Ostwald – de Waele equation

$$\dot{\gamma}_p = K \cdot \tau^n \tag{2}$$

where:

K – constant,

n – exponent or is inverse

$$\tau = K_1 \dot{\gamma}_p^{1/n} \tag{3}$$

The value of the n exponent can be derived by differentiating the following equation

$$n = \frac{d \log \dot{\gamma}_p}{d \log \tau} \tag{4}$$

In the double logarithmic system: $\log \dot{\gamma} = f(\log \tau)$ the n exponent is equal to the tangent of the inclination angle of the tangent to the given curve in the given point. Since the relation (3) is non-linear, thus the n exponent is also non-linear and depends on shear velocity $\dot{\gamma}$.

When analyzing the designed cable channel, it is also necessary to digitize the model, which is in turn one of the most vital stages in the whole design process. The digitization process conditions the number of variables, number and shape of individual elements and influences the final precision of the solution. In order to assure high design precision for the target component, the target basic elements should be small enough for the internal approximation functions to apply the polynomials with minimum approximation error. Fig. 7. depicts the designed cable channel with the total surface area of 653,031 cm^2 divided into 2013 elements via Finite Elements Method (FEM).

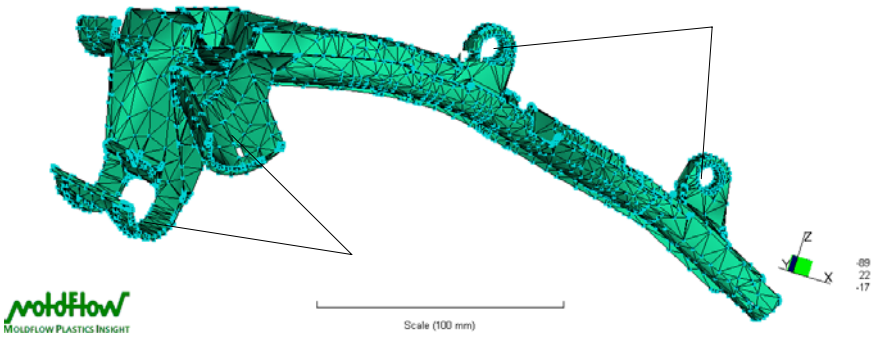

Fig. 7. Moldflow based digitization process for the target model: 1 – fixture mounting the cable channel to the fuel pump, 2 – fixtures mounting the electrical cables
Rys. 7. Dyskretyzacja modelu za pomocą oprogramowania Moldflow: 1 – uchwyty mocujące kanał kablowy do pompy paliwa, 2 – uchwyty podtrzymujące wiązkę elektryczną

The next step in the mould piece analysis features a selection of the appropriate material as well as the moulding process parameters. The MoldFLOW system contains a complete data base of material data (with approximately 7000 plastic materials), along with their process parameters. Obviously, there is also the possibility of defining new material properties and parameters, though it is necessary then to precisely establish the p – V – T (1). Taking all the requirements for the designed cable channel, it was decided to utilize the Poliamid 66 material, which is characterized by:

– high mechanical resistance,
– nearly perfect balance between rigidity and resistance,
– good material properties at elevated temperatures,
– good electrical material properties, including non-flammability,
– good resistance to abrasion and chemical reactions.

Having selected the proper plastic material, it is possible to go ahead with the proper analysis, starting with the selection of the plastic injection points.

Table 1 presents a fragment of the report generated by the Moldflow software, which allows to observe precisely the timeline for the mould injection process, dependent on the internal mould pressure. The said analysis was carried out for the material injection velocity

of approximately 80 cm^3/s for each injection point. Based on the aforementioned report, it is possible to establish that the injection mould will be filled in 0,73 seconds with the maximum pressure of 44,06 MPa approximately 0,03 seconds prior to the injection process completion.

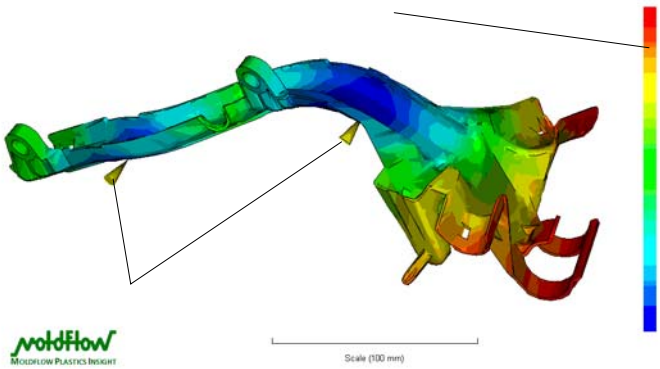

Fig. 8. Analysis of the plastic material injection process 1 – plastic material injection points, 2 – timeline for the mould injection process
Rys. 8. Analiza wtrysku tworzywa sztucznego: 1 – punkty wtrysku tworzywa, 2 – oś czasu wypełnienia formy przez tworzywo

Table 1

A fragment of the report on the relation between the timeline for the mould injection process and the internal mould pressure

```
Filling phase:    Status: V  = Velocity control P  = Pressure control
   |-------------------------------------------------------------|
   |  Time   | Volume|  Pressure   | Clamp force|Flow rate|Status |
   |  (s)    |  (%)  |    (MPa)    |  (tonne)   |(cm^3/s) |       |
   |-------------------------------------------------------------|
   |   0.04  |  4.95 |        2.66 |       0.09 |   80.70 |   V   |
                                   .
   |   0.46  | 63.12 |       35.13 |      27.95 |   81.58 |   V   |
                                   .
   |   0.73  | 99.71 |       35.25 |      38.27 |   38.91 |   P   |
   |   0.73  |100.00 |       35.25 |      38.32 |   38.91 |Filled |
Filling phase results summary :
   Maximum injection pressure           (at    0.704 s) =      44.0620
```

4. Conclusions

The process of designing plastic components is extremely complex, where apart from simple geometric errors there are also numerous problems related with the selection of an appropriate material. Non-Newtonian material flow parameters, variable pressure field and different solidification temperatures are just a few of material parameters which the Unigraphics and the Moldflow software packages focus on. Thanks to the application of this

particular type of software and completion of various types of tests and initial simulations, the number of errors occurring during the design and manufacturing stages of the moulding forms decreases significantly, which in turn lowers the production costs. Application of the mould injection process simulation as well as utilization of the Computer Aided Production increase the manufacturing precision, which in turn decreases the time necessary to introduce a new component to production. This particular technique is under rapid development and constitutes the future in the area of designing and manufacturing machines and general purpose equipment.

References

[1] Zawistowski H., Frenkler D., *Konstrukcja form wtryskowych do tworzyw termoplastycznych*, WNT, Warszawa 1999.
[2] Periodical Mechanik, Vol. 1/2001, 2/2001, 2/2007, 3/2007.
[3] Tool forumOBERON 2001.
[4] Web page www.ugs.com.
[6] Web page www.nicom.pl.
[7] *Modeling For Moldmakers* Unigraphics Solutions Inc.
[8] *Mill Manufacturing Process* Unigraphics Solutions Inc.
[9] *Mold Wizard Design Process* Unigraphics Solutions Inc.
[10] Brochure AB Sandvik Coromant, Sandviken, Sweden 2002.
[11] Frącz W., Krywult B., *Projektowanie i wytwarzanie elementów z tworzyw sztucznych*, Wydawnictwo PRz, Rzeszów 2005.